

Iso-Mix 315 W1

Mixed-flow inline fans in sound-insulated casings

- Sound-insulated casing
- Impeller type: Mixed-flow
- Casing material: Coated steel
- Installation in any position
- Cable with mains plug

	Unit of measurement	Iso-Mix 315 W1	
Speed	-	1	2
Phases	-	1	
Minimum supply voltage	V	230	
Maximum supply voltage	V	230	
Power supply frequency	Hz	50/60	
Maximum airflow	m³/h	1510	1920
Weight	kg	29.6	
Transported air temperature (max)	°C	60	
Ingress protection rating	-	IPX4	
Ingress protection rating of the drive	-	IP44	
Impeller material	-	Plastic	

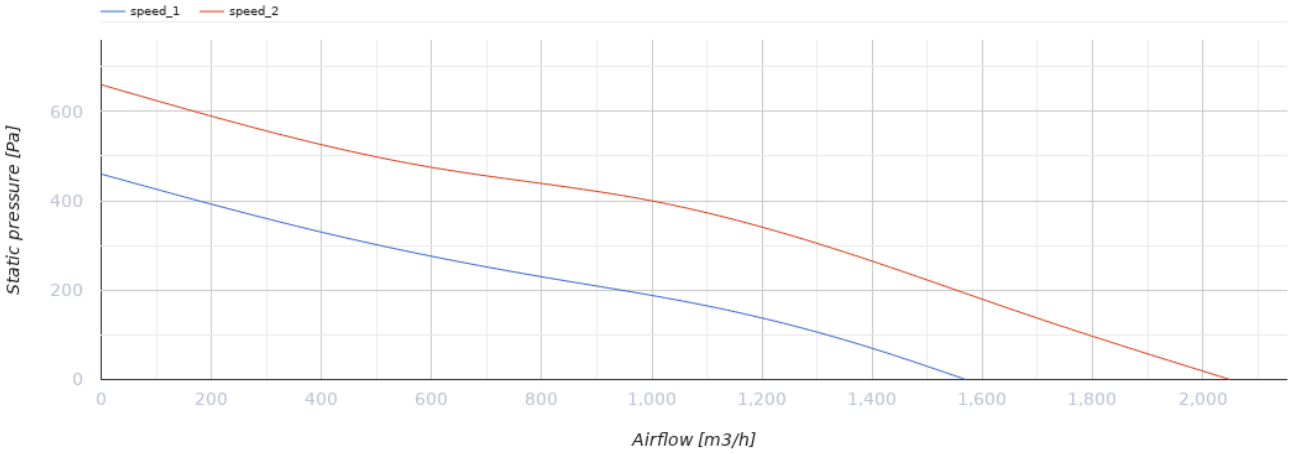
speed_1
speed_2
Static pressure [Pa]
600
400
200
0
0
200
400
600
800
1,000
1,200
1,400
1,600
1,800
2,000
Airflow [m3/h]

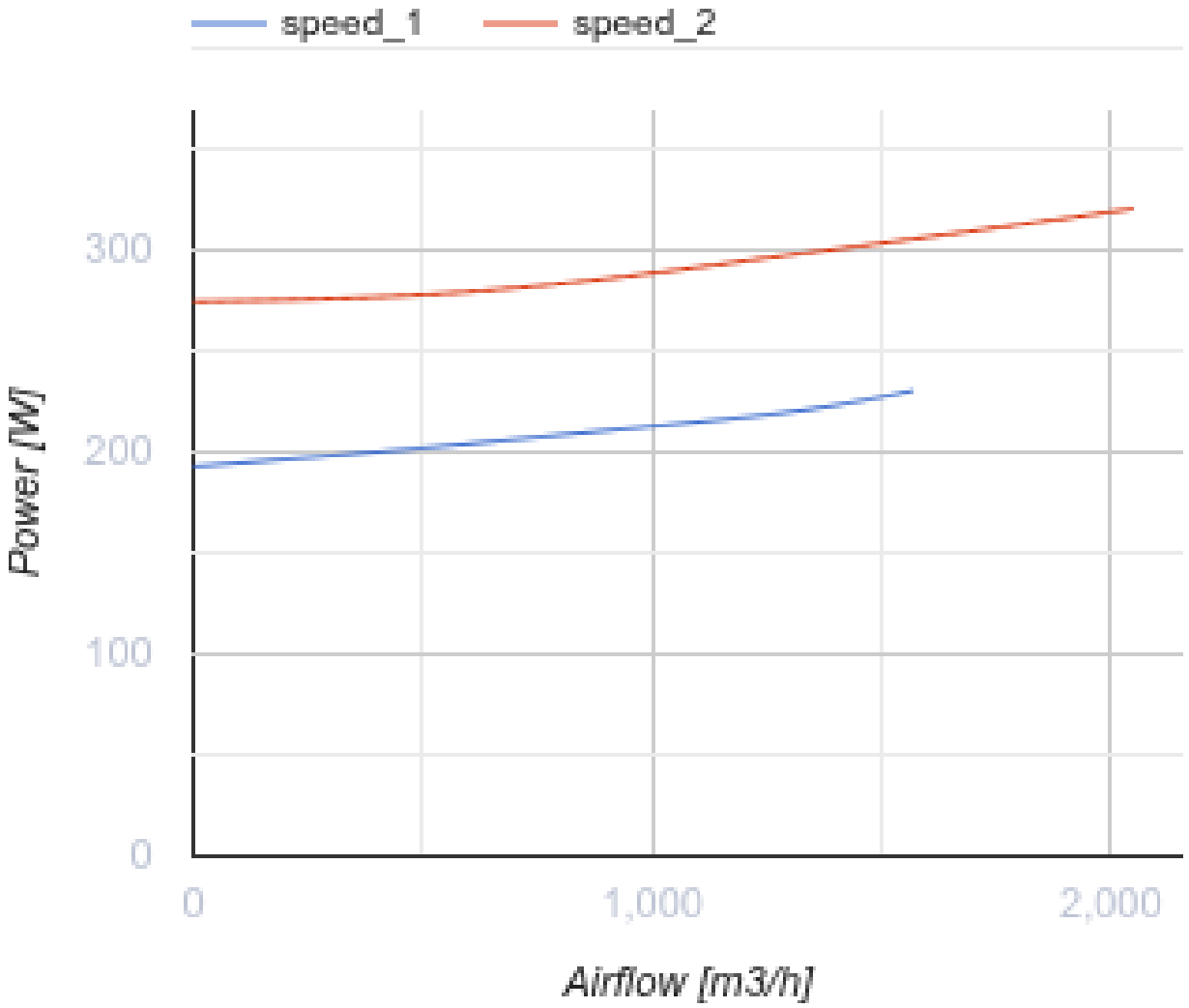
speed_1
speed_2
Power [W]
300
200
100
0
0
1,000
2,000
Airflow [m3/h]

Dimensions

Ø D	H	L	L1	W	W1
313	434	785	180	526	450

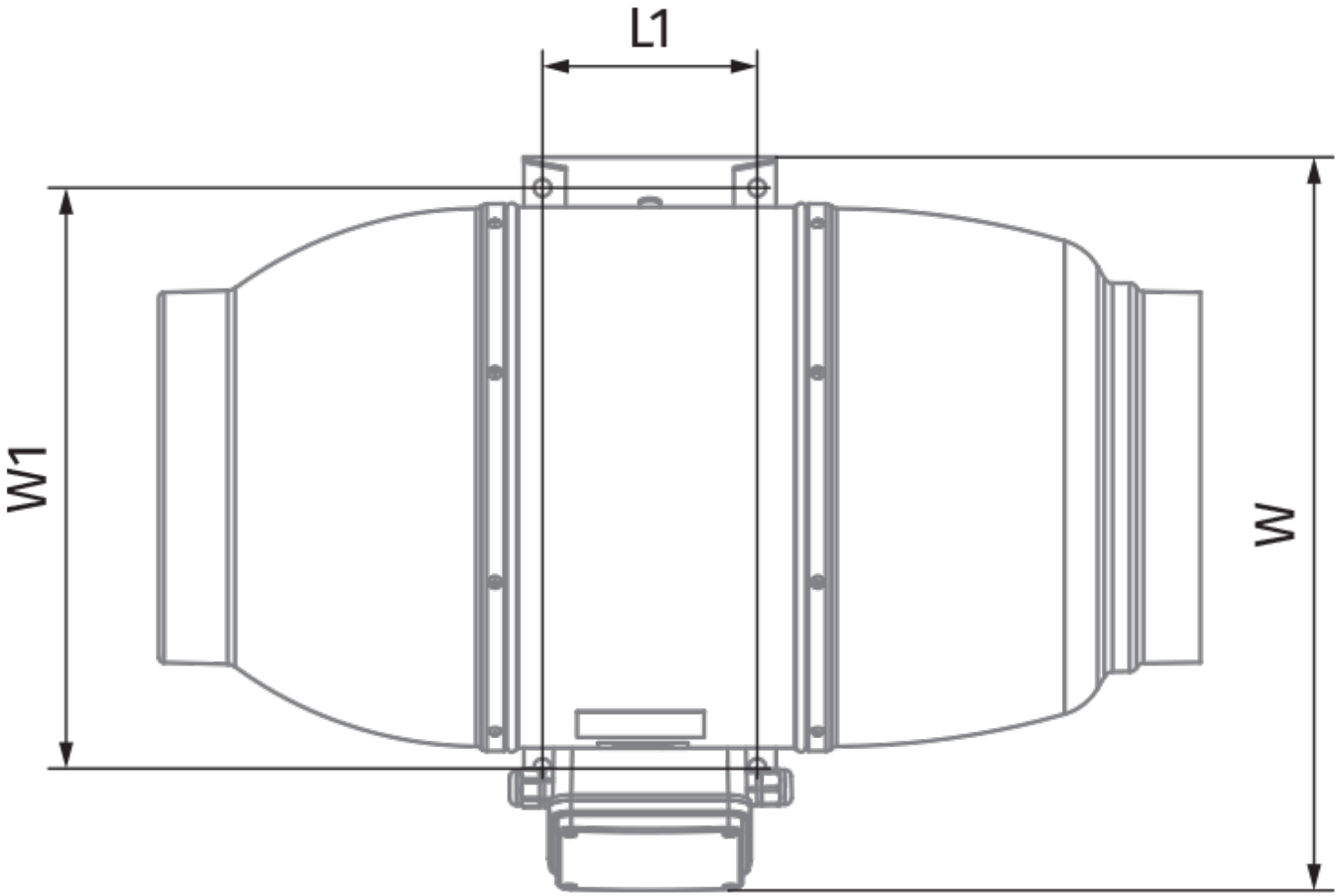

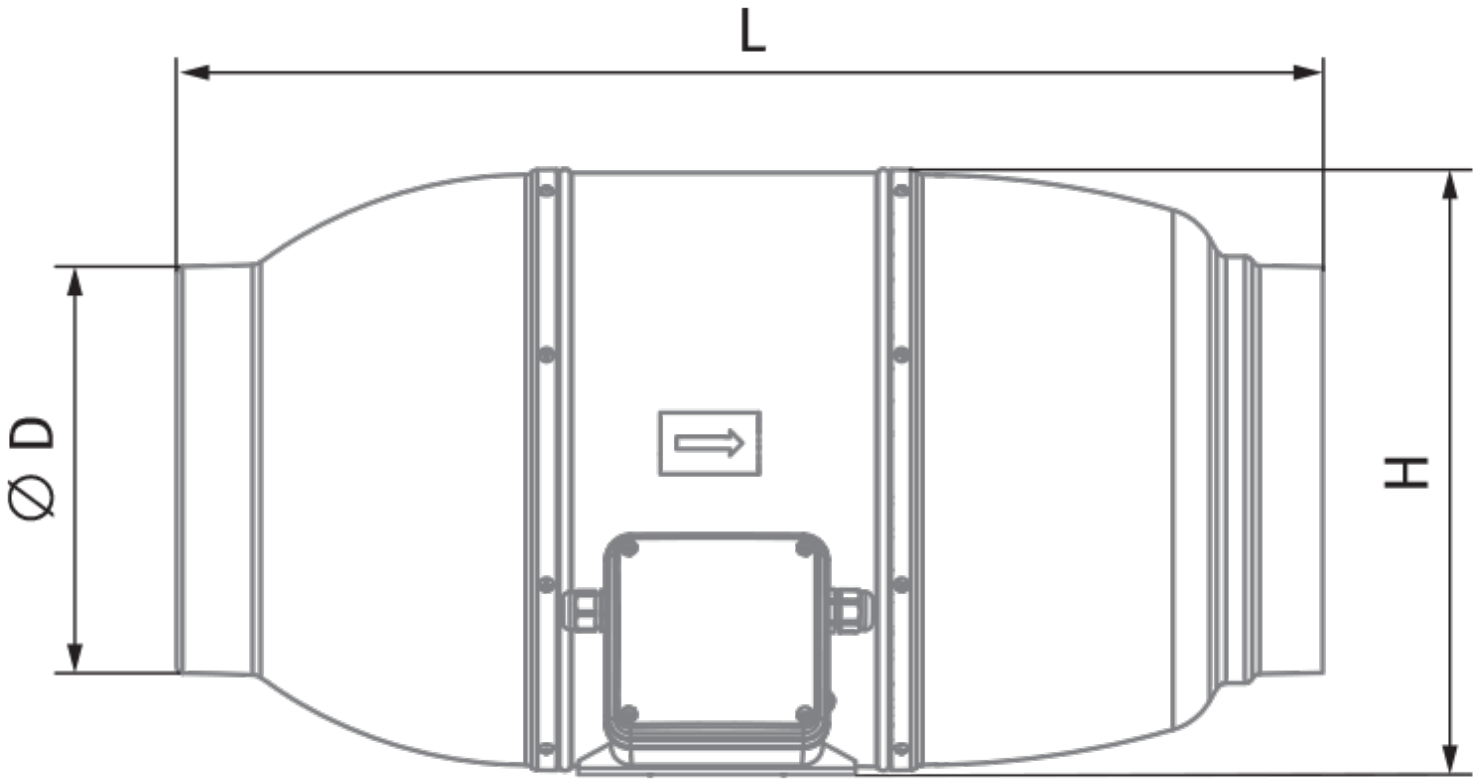
L
⌀ D
H

Ecodesign

Trademark	Blauberg
Model	Iso-Mix 315 W1
Type of ventilation unit	Unidirectional
Type of drive installed	External MSD or VSD
Type of heat recovery system	None
Nominal external pressure (Pa)	327
Maximum external leakage rates (%)	2.7
Static efficiency (%)	32.5
Declared typology	NRVU UVU
Sound power level (dB(A))	58
Effective electric power input (kW)	0.317

Accessories

Water heaters

Name	Photo	Description
WKH 315-2		Duct water heaters for round ducts
WKH 315-4		Duct water heaters for round ducts