

Iso-Mix 315

Mixed-flow inline fans in sound-insulated casings

- Sound-insulated casing
- Impeller type: Mixed-flow
- Casing material: Coated steel
- Installation in any position

	Unit of measurement	Iso-Mix 315	
Speed	-	1	2
Phases	-	1	
Minimum supply voltage	V	230	
Maximum supply voltage	V	230	
Power supply frequency	Hz	50/60	
Maximum airflow	m³/h	1510	1920
Weight	kg	29.6	
Transported air temperature (max)	°C	60	
Ingress protection rating	-	IPX4	
Ingress protection rating of the drive	-	IP44	
Impeller material	-	Plastic	

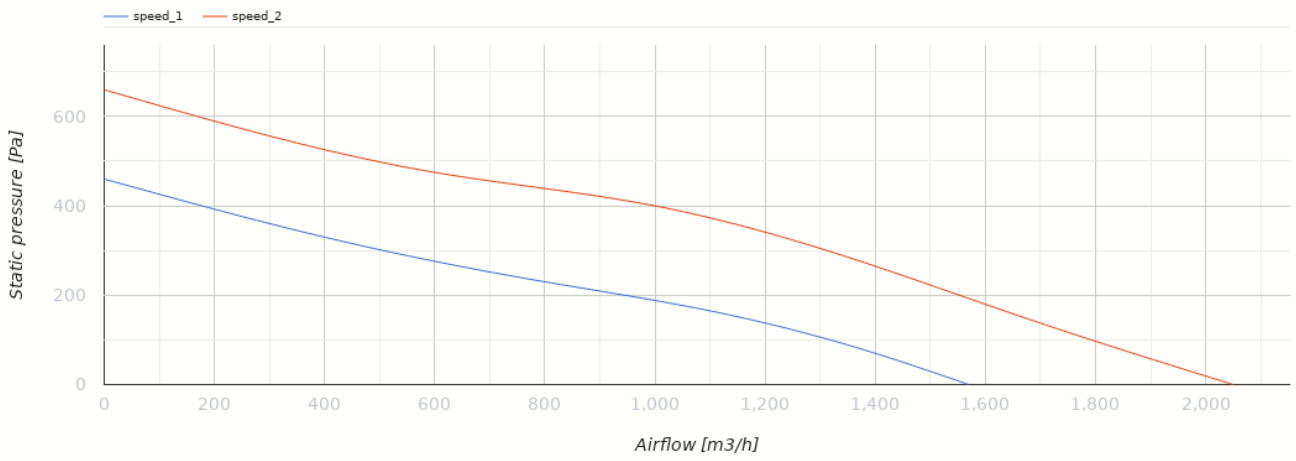

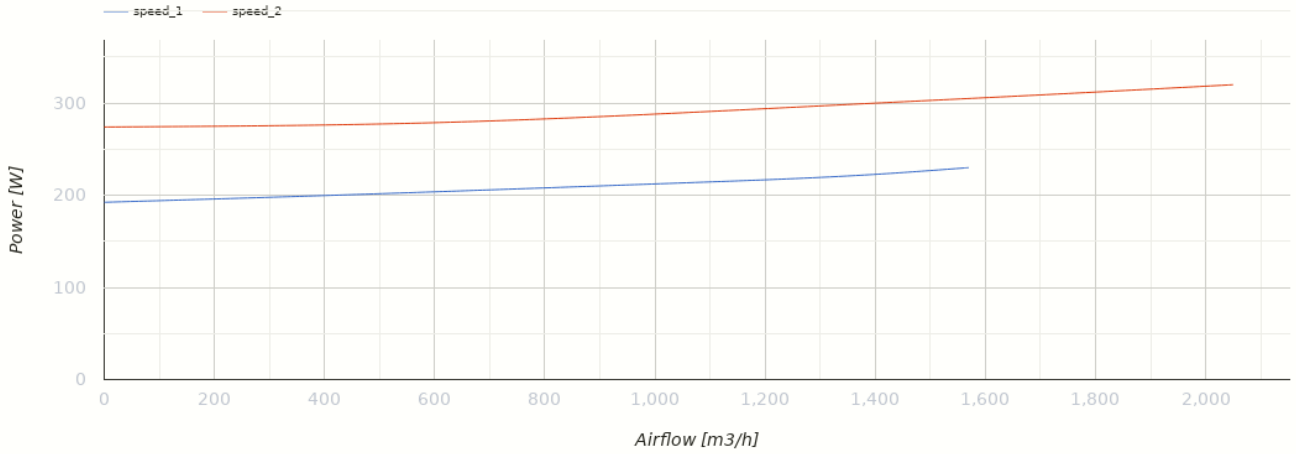

Dimensions

Ø D	H	L	L1	W	W1
313	434	785	180	526	450

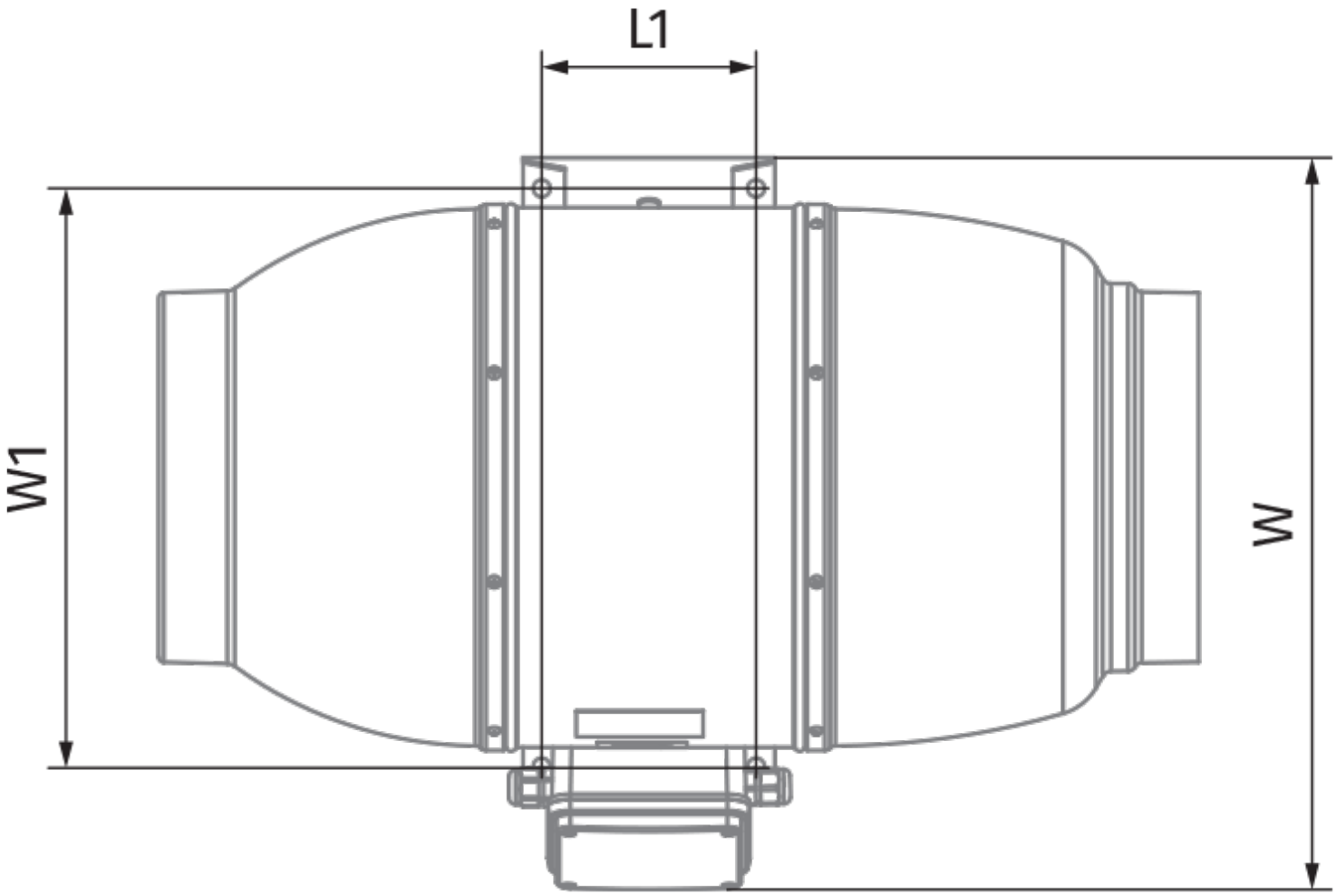
L1
W1
W

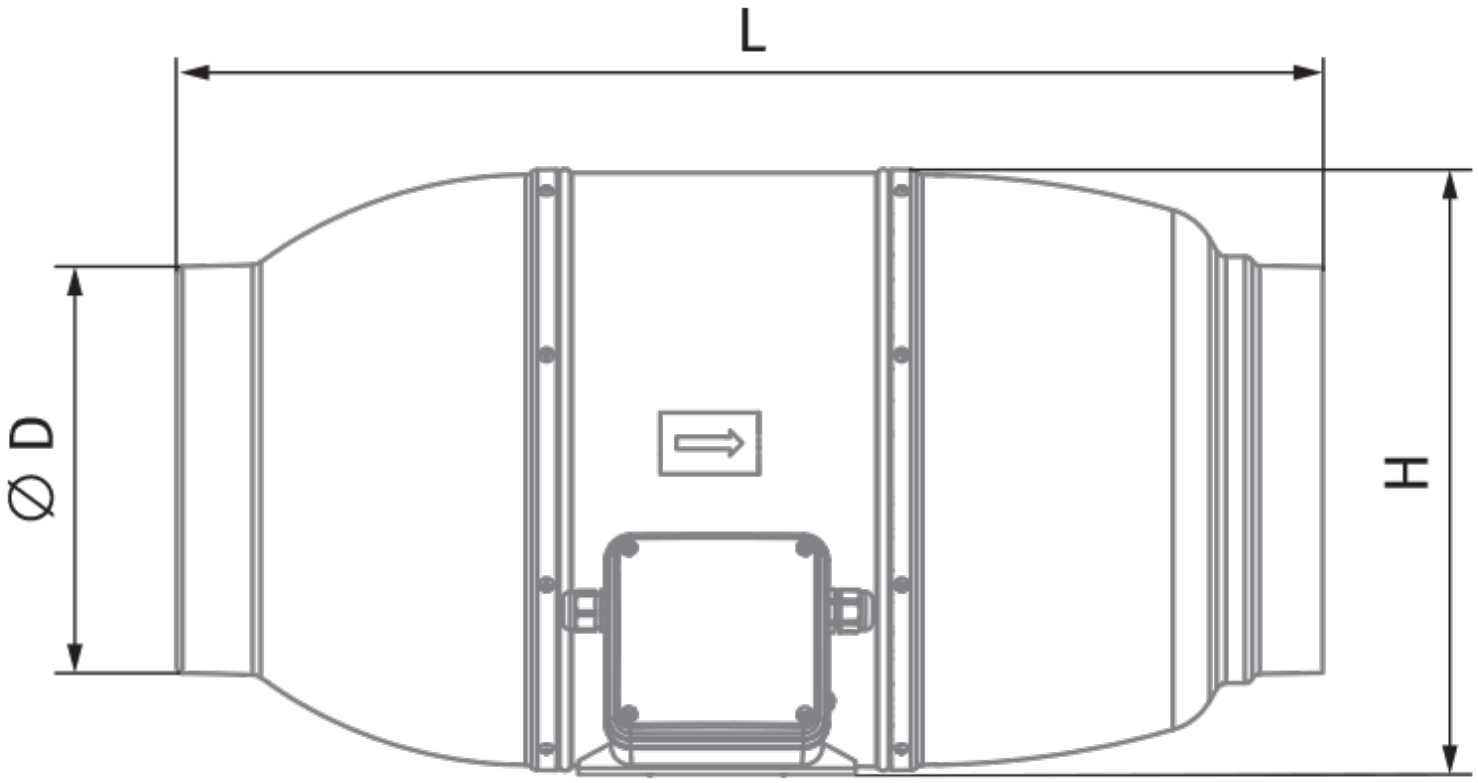
L
⌀ D
H

Ecodesign

Trademark	Blauberg
Model	Iso-Mix 315
Type of ventilation unit	Unidirectional
Type of drive installed	External MSD or VSD
Type of heat recovery system	None
Nominal external pressure (Pa)	327
Maximum external leakage rates (%)	2.7
Static efficiency (%)	32.5
Declared typology	NRVU UVU
Effective electric power input (kW)	0.317
Sound power level (dB(A))	58

Accessories

Water heaters

Name	Photo	Description
WKH 315-2		Duct water heaters for round ducts
WKH 315-4		Duct water heaters for round ducts