

# Iso-Mix 250 US

Mixed-flow inline fans in sound-insulated casings

- Sound-insulated casing
- Control: Built-in speed controller
- Impeller type: Mixed-flow
- Casing material: Coated steel
- Installation in any position

| | Unit of measurement | Iso-Mix 250 US | |
|---|---|---|---|
| Speed | - | 1 | 2 |
| Phases | - | 1 | |
| Maximum supply voltage | V | 230 | |
| Minimum supply voltage | V | 230 | |
| Power supply frequency | Hz | 50/60 | |
| Maximum airflow | m³/h | 1035 | 1315 |
| Weight | kg | 15 | |
| Transported air temperature (max) | °C | 60 | |
| Ingress protection rating | - | IPX4 | |
| Ingress protection rating of the drive | - | IP44 | |
| Impeller material | - | Plastic | |

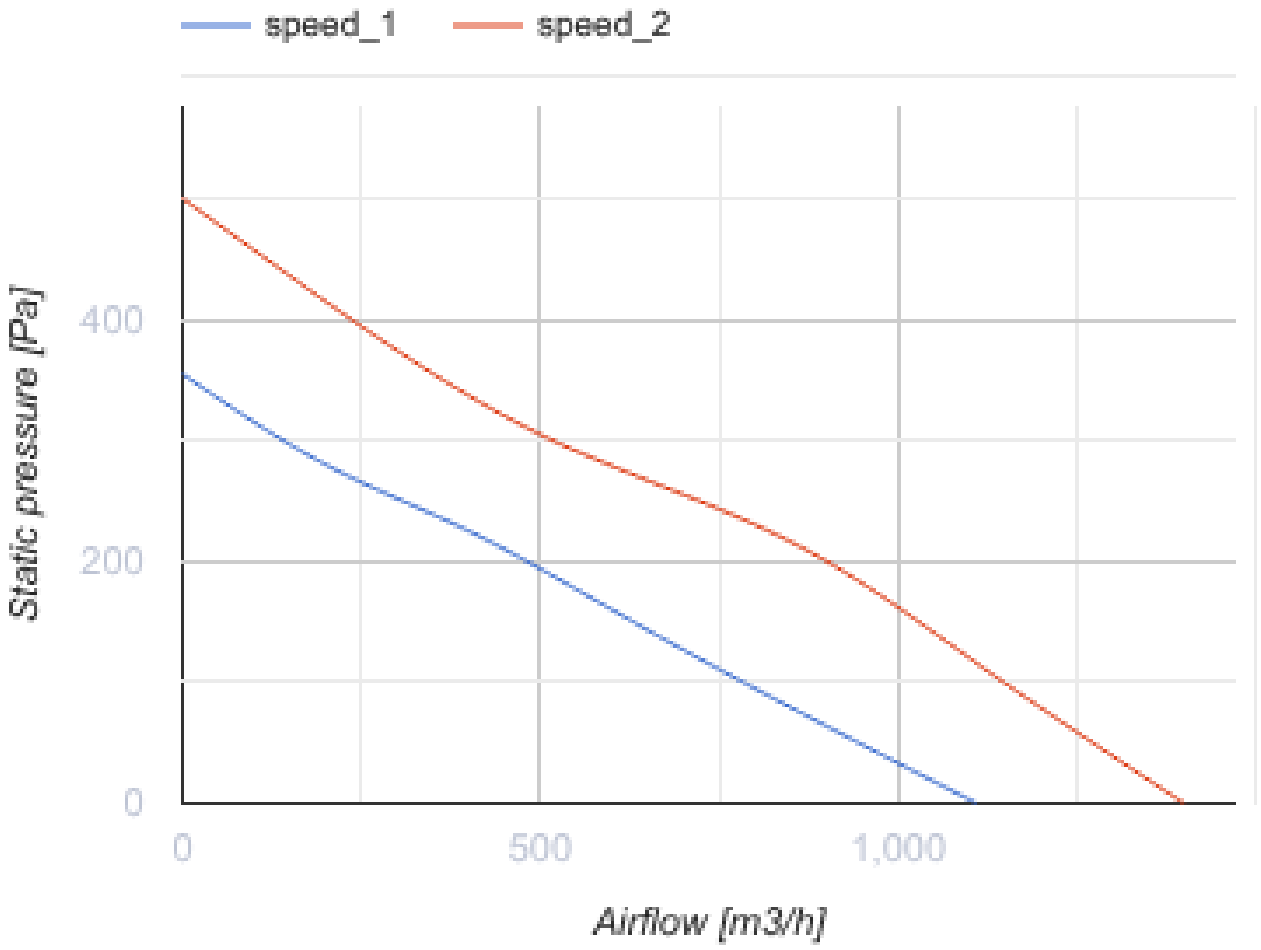
speed_1
speed_2
Static pressure [Pa]
400
200
0
0
500
1,000
Airflow [m3/h]

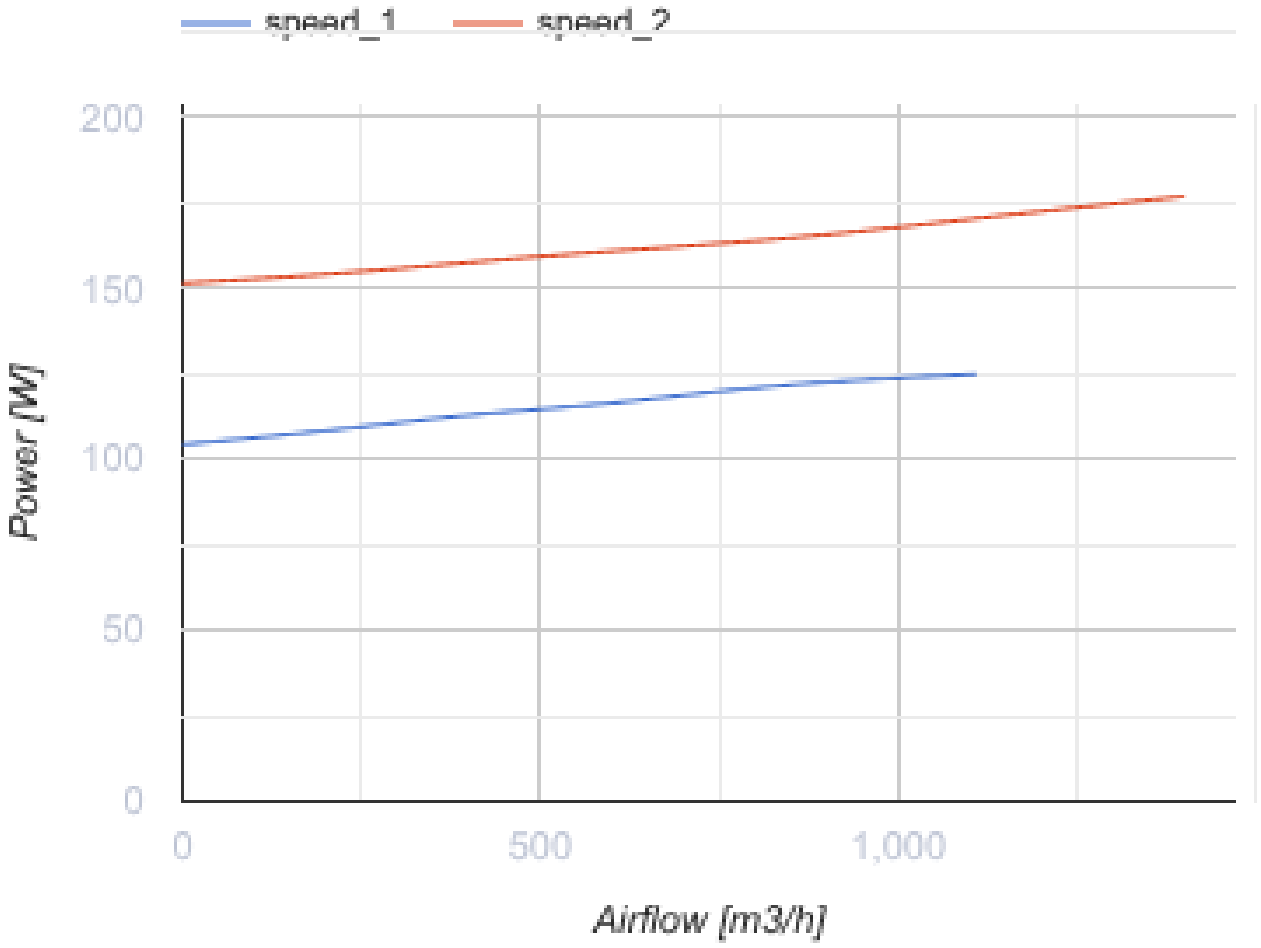


## Dimensions

| Ø D | H | L | L1 | W | W1 |
|---|---|---|---|---|---|
| 248 | 360 | 665 | 130 | 445 | 370 |

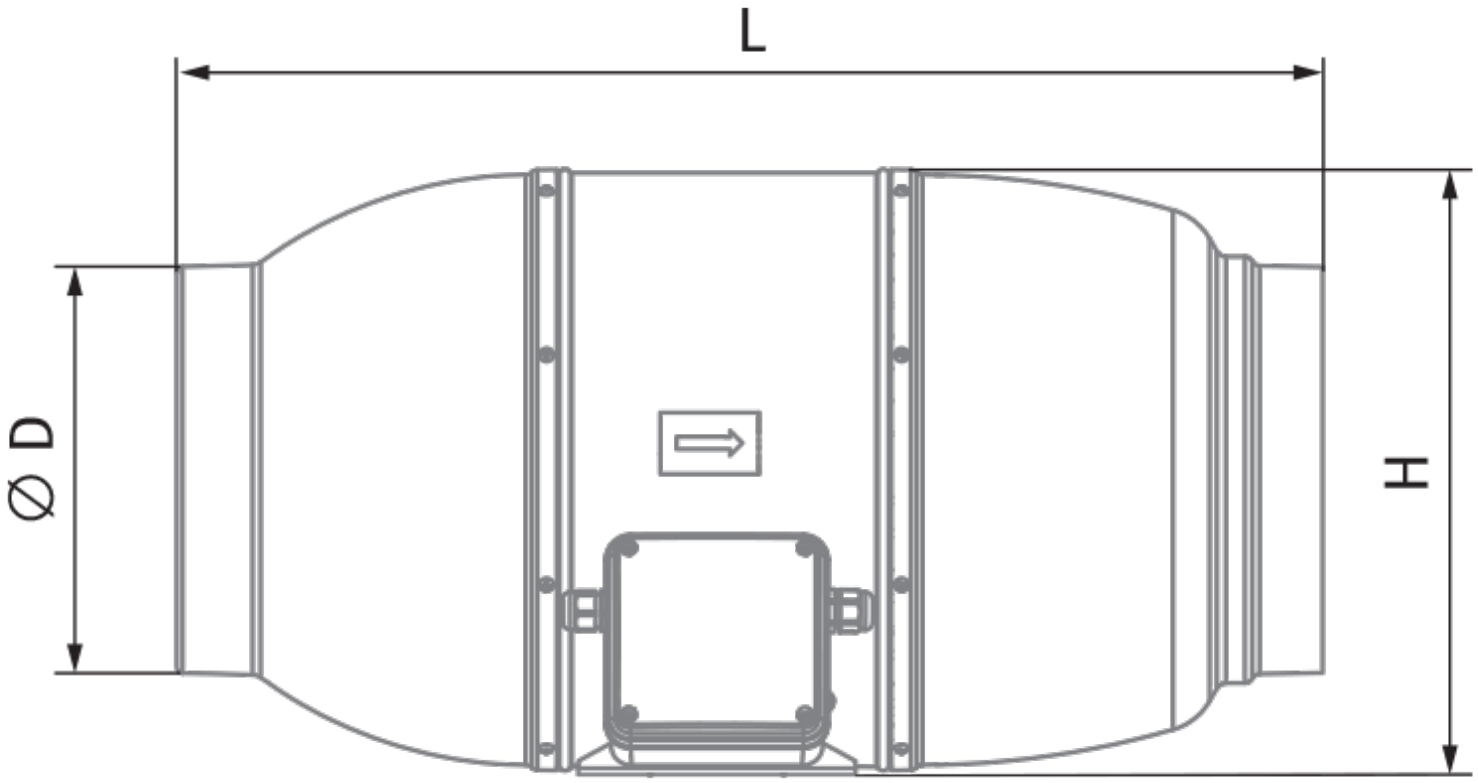
L
⌀ D
H

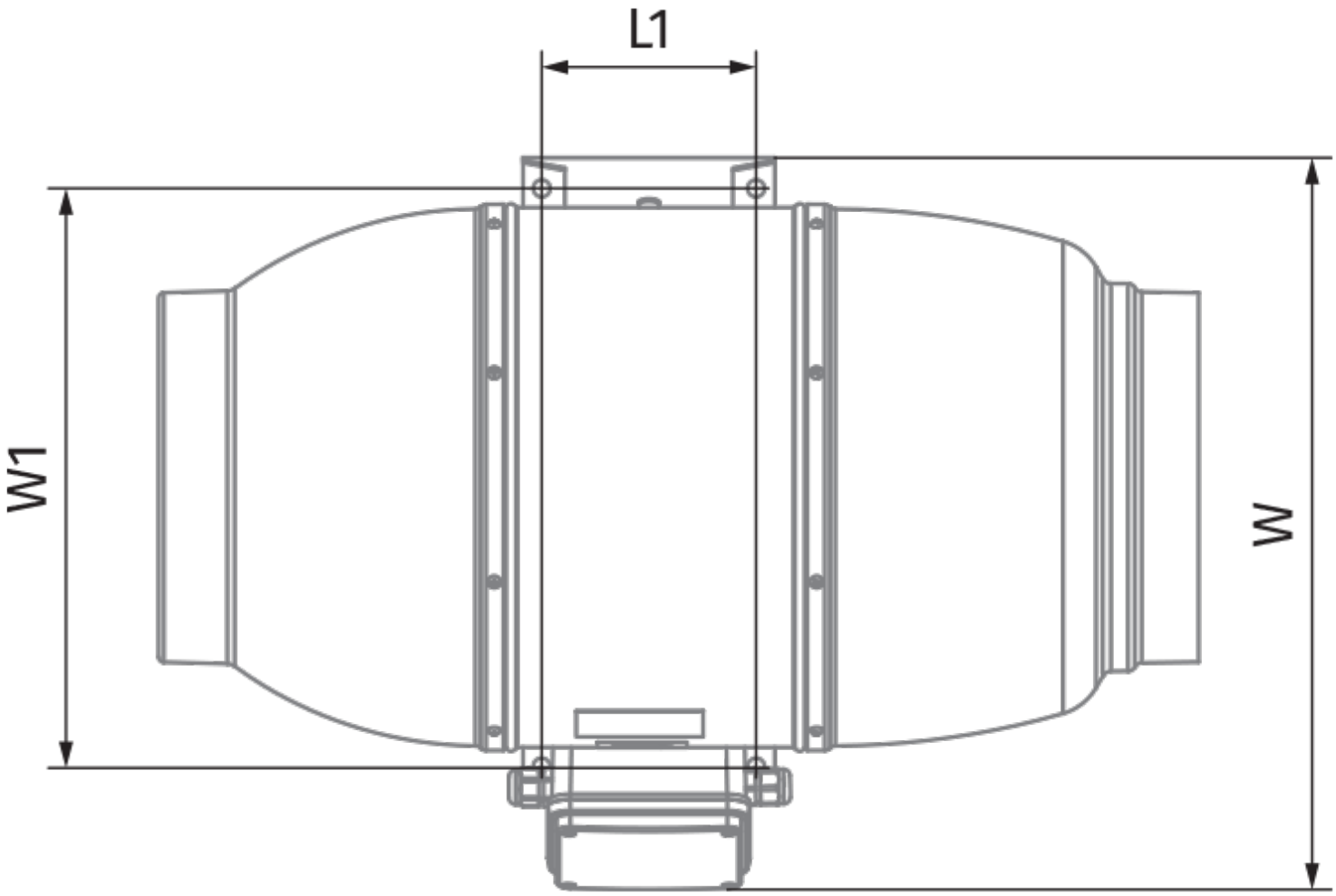
L1
W1
W

## Ecodesign

| | |
|---|---|
| Trademark | Blauberg |
| Model | Iso-Mix 250 US |
| Type of ventilation unit | Unidirectional |
| Type of drive installed | External MSD or VSD |
| Type of heat recovery system | None |
| Nominal external pressure (Pa) | 236 |
| Maximum external leakage rates (%) | 2.7 |
| Static efficiency (%) | 30.9 |
| Sound power level (dB(A)) | 56 |
| Declared typology | NRVU UVU |
| Effective electric power input (kW) | 0.174 |

## Accessories

### Water heaters

| Name | Photo | Description |
|---|---|---|
| WKH 250-2 |  | Duct water heaters for round ducts |
| WKH 250-4 |  | Duct water heaters for round ducts |