

# Iso-Mix 200 TUS

Mixed-flow inline fans in sound-insulated casings

- Sound-insulated casing
- Control: Built-in speed controller
- Impeller type: Mixed-flow
- Casing material: Coated steel
- Installation in any position
- Timer: Turn off timer

| | Unit of measurement | Iso-Mix 200 TUS | | |
|---|---|---|---|---|
| Speed | - | 1 | 2 | 3 |
| Phases | - | 1 | | |
| Minimum supply voltage | V | 230 | | |
| Maximum supply voltage | V | 230 | | |
| Power supply frequency | Hz | 50/60 | | |
| Maximum airflow | m³/h | 779 | 985 | 1130 |
| Weight | kg | 7.9 | | |
| Transported air temperature (max) | °C | 60 | | |
| Ingress protection rating | - | IPX4 | | |
| Ingress protection rating of the drive | - | IP44 | | |
| Impeller material | - | Plastic | | |

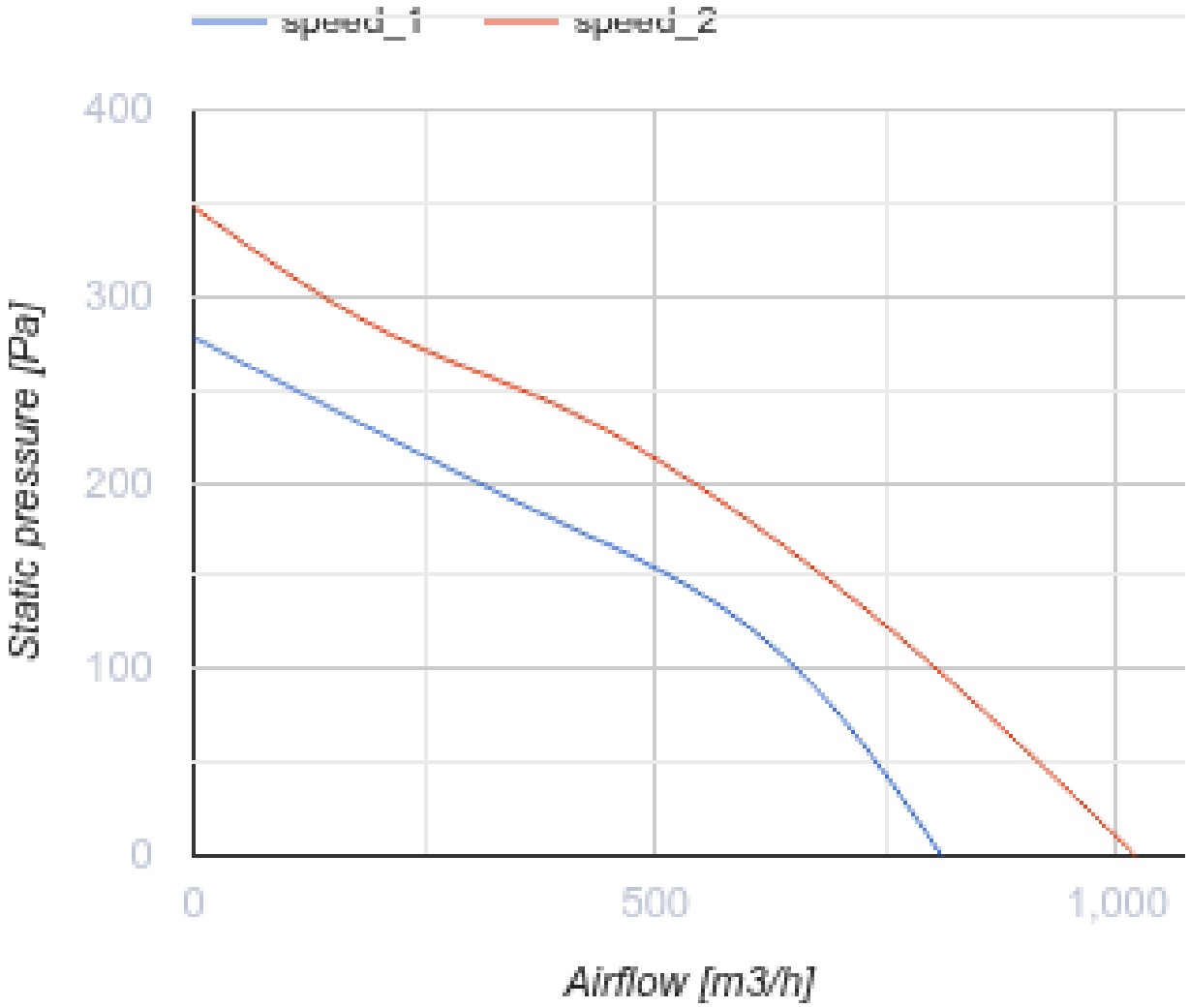
speed_1
speed_2
400
300
200
100
0
Static pressure [Pa]
0
500
1,000
Airflow [m3/h]

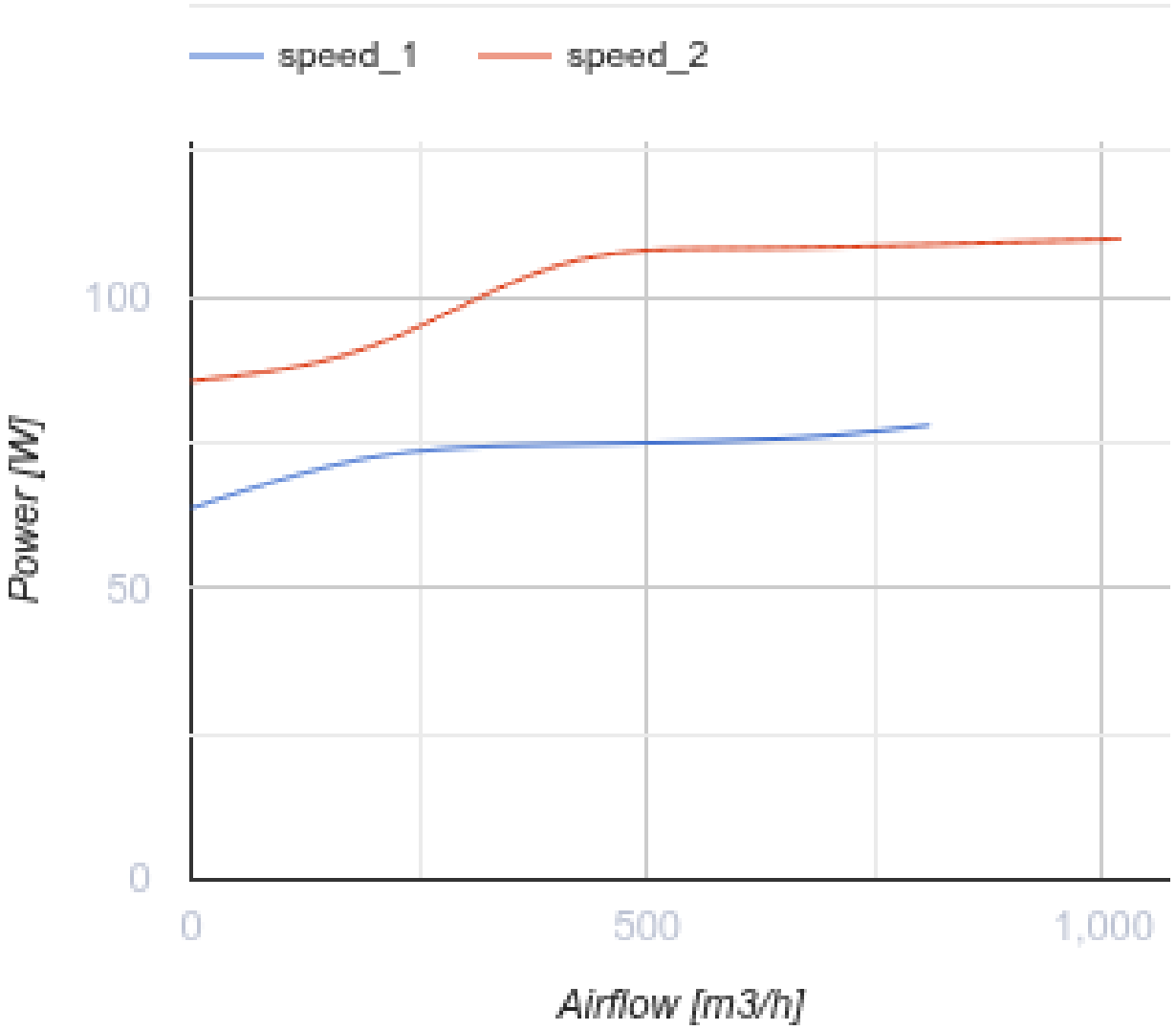


## Dimensions

| Ø D | H | L | L1 | W | W1 |
|---|---|---|---|---|---|
| 198 | 295 | 560 | 115 | 392 | 310 |

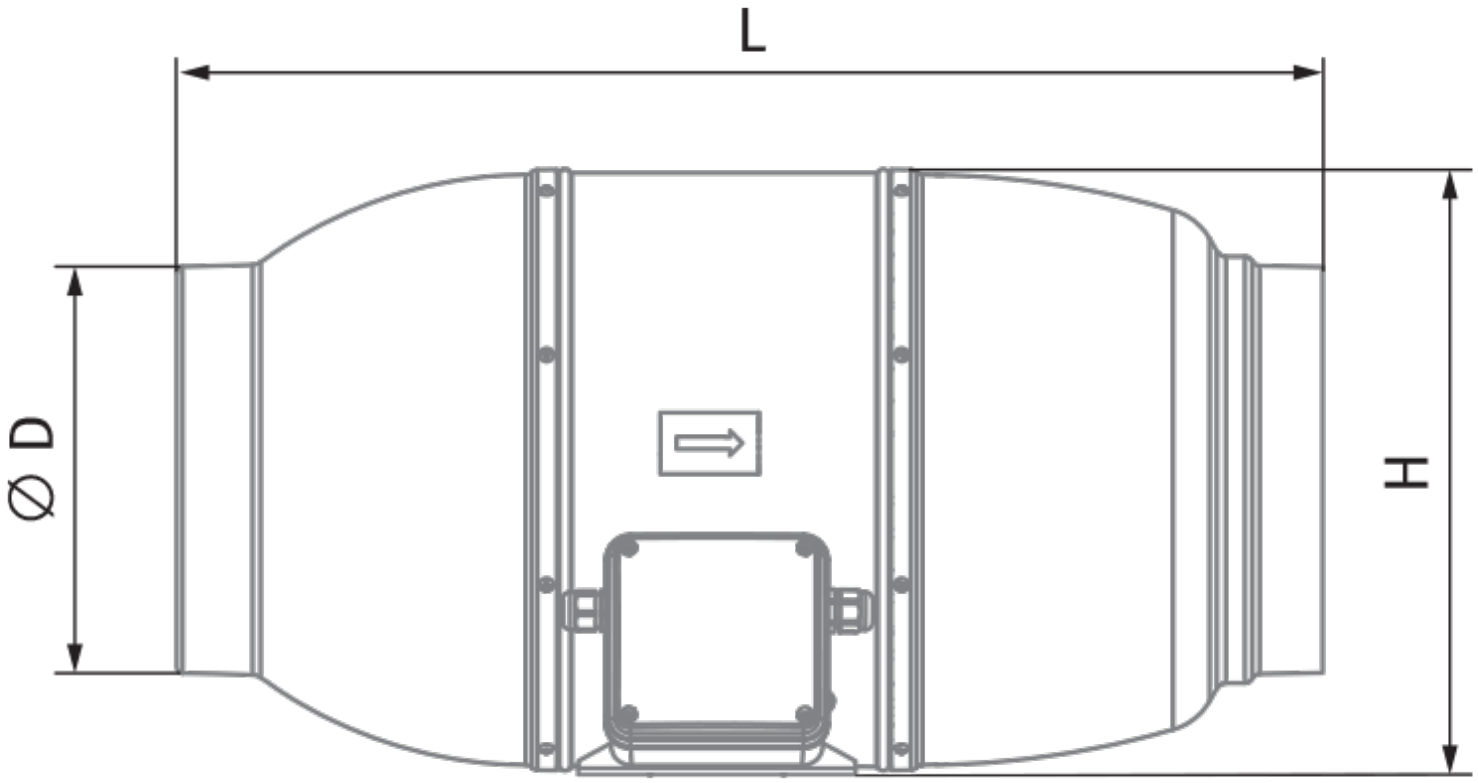
L
⌀ D
H

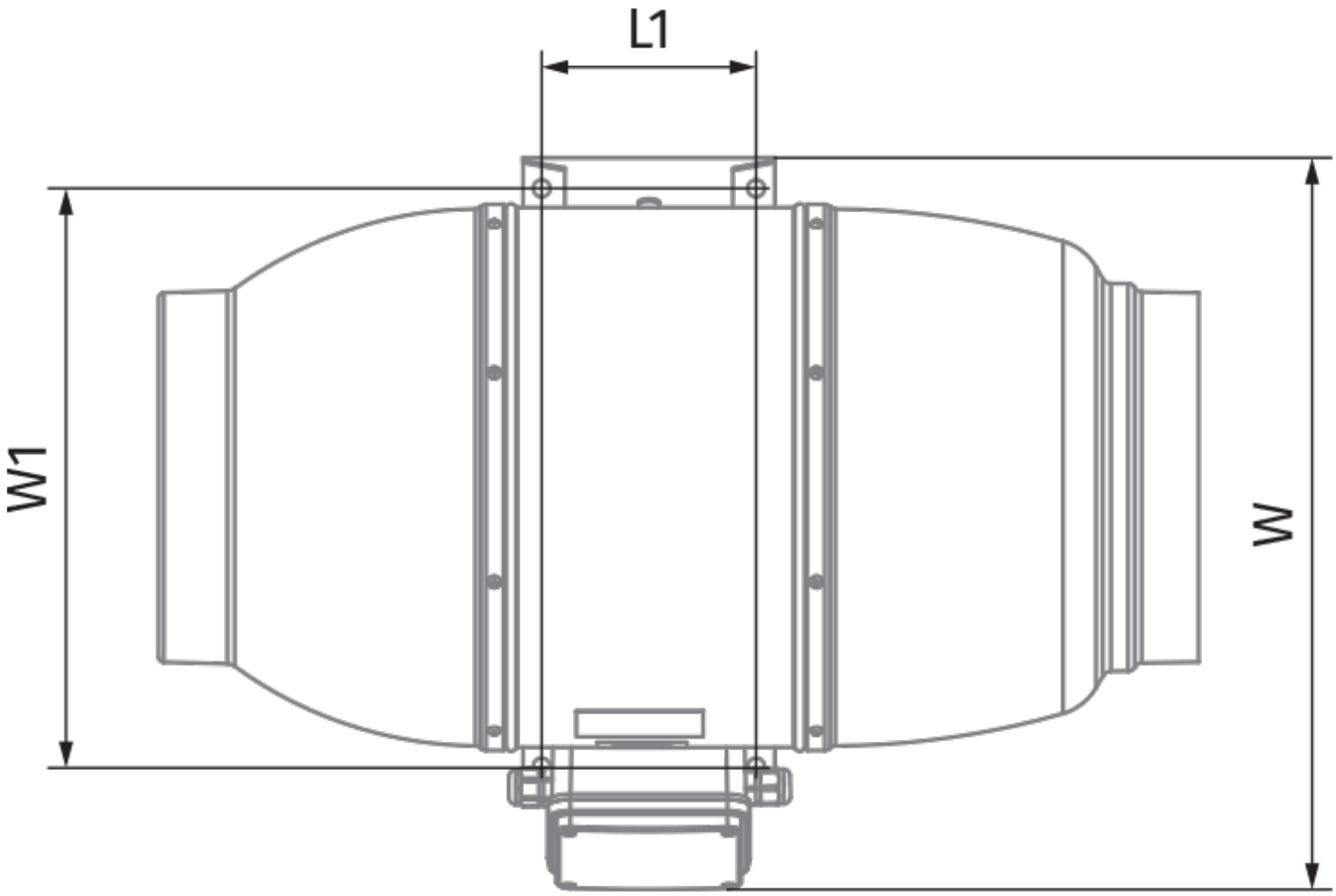
L1
W1
W

## Ecodesign

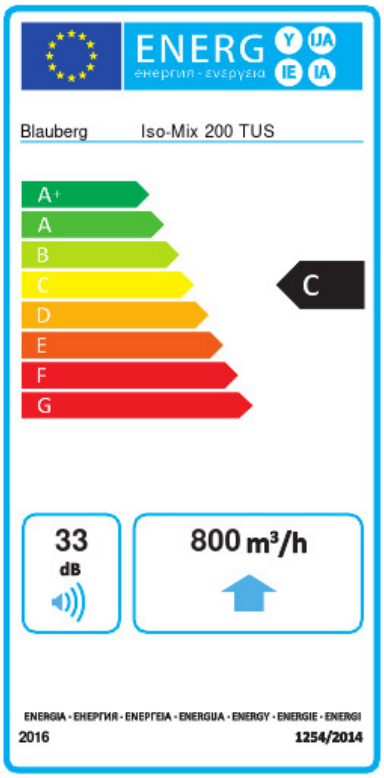


| | | | | | | |
|---|---|---|---|---|---|---|
| Trademark | Blauberg | | | | | |
| Model | Iso-Mix 200 TUS | | | | | |
| Specific energy consumption (SEC) (kWh/(m²/a)) | Cold | | Average | | Warm | |
| | -52.8 | A+ | -25.7 | C | -10.2 | E |
| Type of ventilation unit | Unidirectional | | | | | |
| Type of drive installed | Multi-speed | | | | | |
| Type of heat recovery system | None | | | | | |
| Maximum flow rate (m³/h) | 800 | | | | | |
| Electric power input (W) | 110 | | | | | |
| Reference flow rate (m³/s) | 0.156 | | | | | |
| Reference pressure difference (Pa) | 50 | | | | | |
| Specific power input (SPI) (W/(m³/h)) | 0.139 | | | | | |
| Control typology | Local demand control | | | | | |
| Maximum external leakage rates (%) | 2.7 | | | | | |
| Declared typology | RVU UVU | | | | | |
| Sound power level (dB(A)) | 33 | | | | | |
| The annual electricity consumption (AEC) (kWh/a) | Cold | | Average | | Warm | |
| | 104 | | 104 | | 104 | |
| The annual heating saved (AHS) (kWh/a) | Cold | | Average | | Warm | |
| | 5536 | | 2830 | | 1280 | |

## Accessories

### Water heaters

| Name | Photo | Description |
|---|---|---|
| WKH 200-2 |  | Duct water heaters for round ducts |
| WKH 200-4 | 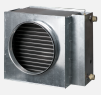 | Duct water heaters for round ducts |

### Fittings

| Name | Photo | Description |
|---|---|---|

| | | |
|---|---|---|
| K 200 |  | Clamp for round flexible ducts |