

Iso-Mix 160 TUS

Mixed-flow inline fans in sound-insulated casings

- Sound-insulated casing
- Control: Built-in speed controller
- Impeller type: Mixed-flow
- Casing material: Coated steel
- Installation in any position
- Timer: Turn off timer

	Unit of measurement	Iso-Mix 160 TUS	
Speed	-	1	2
Phases	-	1	
Minimum supply voltage	V	230	
Maximum supply voltage	V	230	
Power supply frequency	Hz	50/60	
Maximum airflow	m³/h	410	550
Weight	kg	6.1	
Transported air temperature (max)	°C	60	
Ingress protection rating	-	IPX4	
Ingress protection rating of the drive	-	IP44	
Impeller material	-	Plastic	

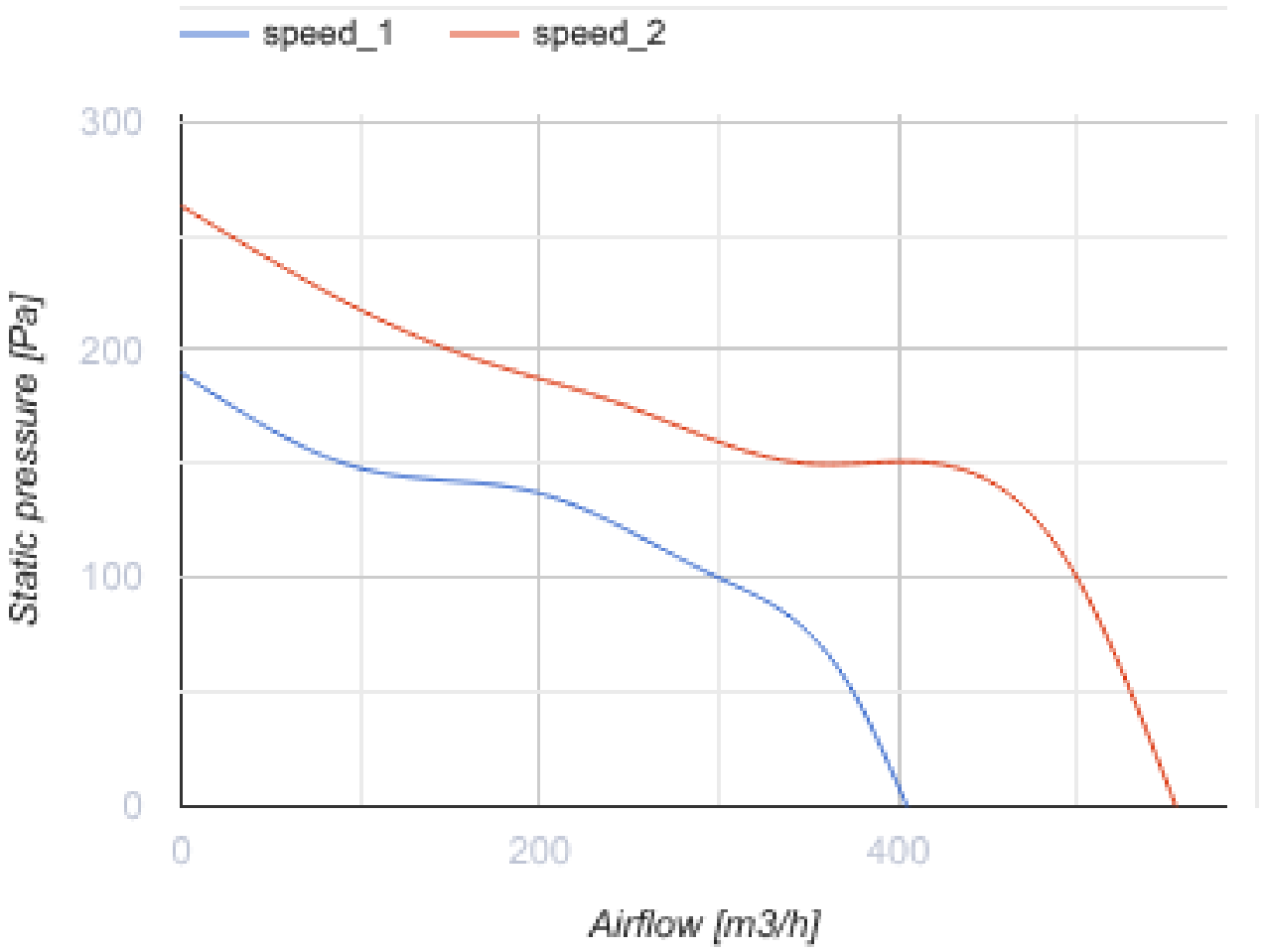
speed_1
speed_2
300
200
100
0
Static pressure [Pa]
0
200
400
Airflow [m3/h]

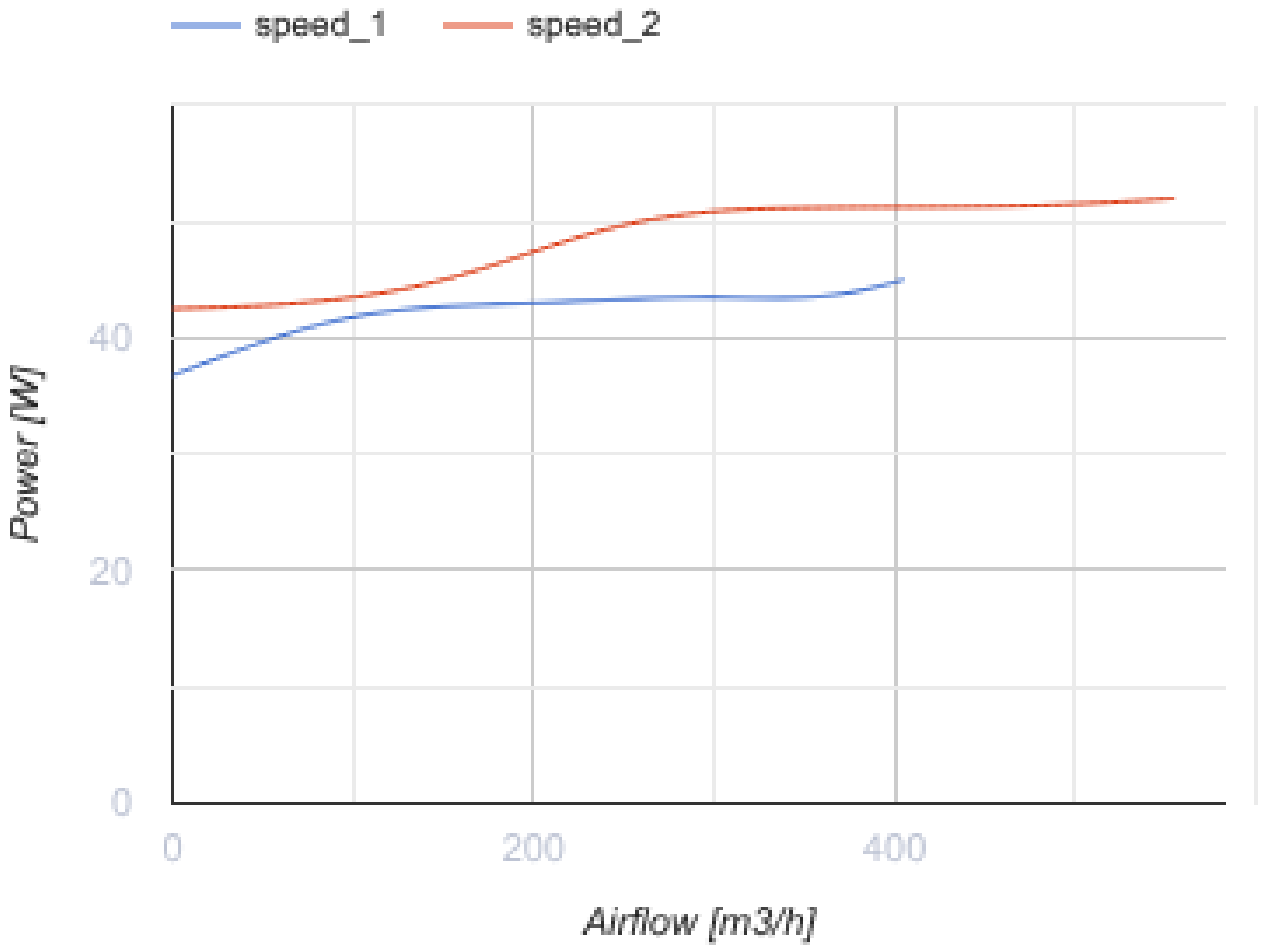

Dimensions

Ø D	H	L	L1	W	W1
157	263	580	44	273	231

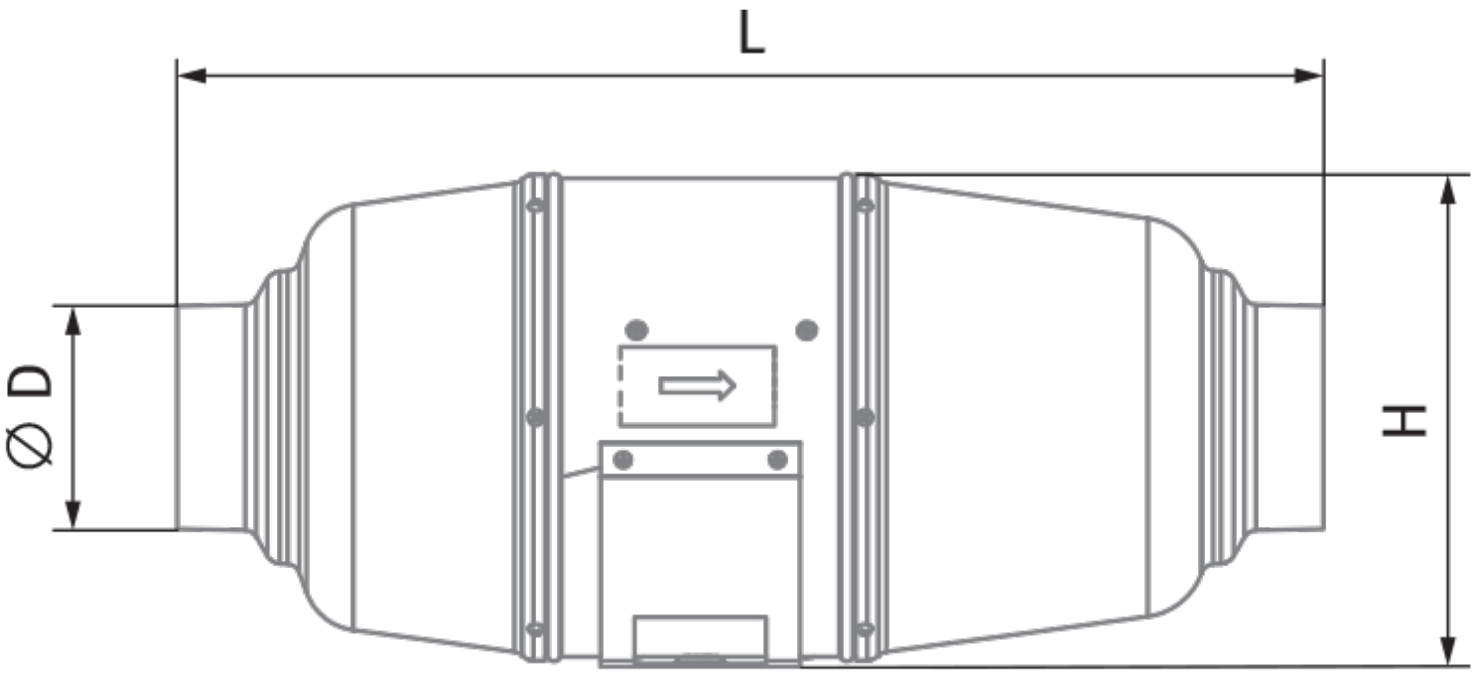
L
⌀ D
H

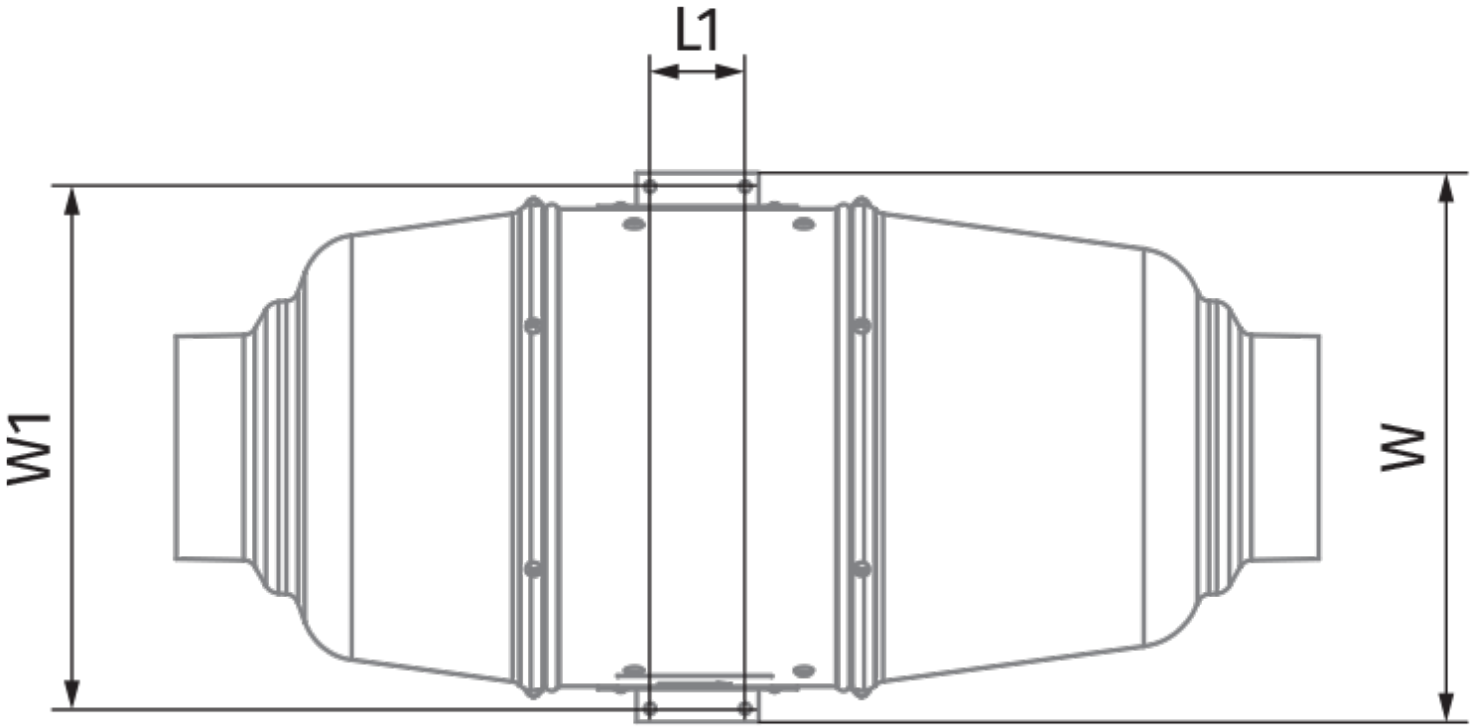
L1
W1
W

Ecodesign

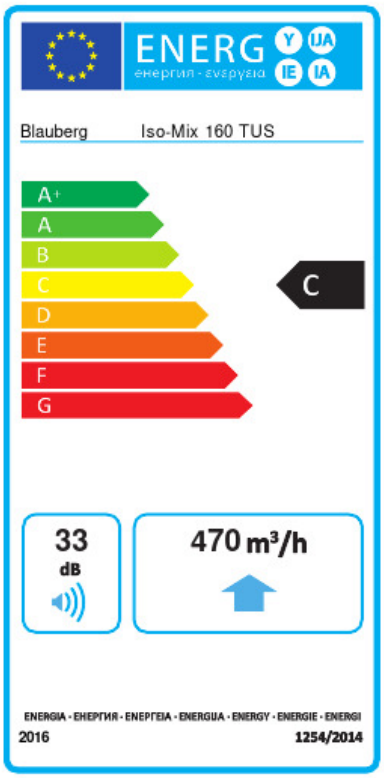

Trademark	Blauberg					
Model	Iso-Mix 160 TUS					
Specific energy consumption (SEC) (kWh/(m²/a))	Cold		Average		Warm	
	-52.8	A+	-25.7	C	-10.2	E
Type of ventilation unit	Unidirectional					
Type of drive installed	Multi-speed					
Type of heat recovery system	None					
Maximum flow rate (m³/h)	470					
Electric power input (W)	52					
Reference flow rate (m³/s)	0.091					
Reference pressure difference (Pa)	50					
Specific power input (SPI) (W/(m³/h))	0.137					
Control typology	Local demand control					
Maximum external leakage rates (%)	2.7					
Declared typology	RVU UVU					
Sound power level (dB(A))	33					
The annual electricity consumption (AEC) (kWh/a)	Cold		Average		Warm	
	102		102		102	
The annual heating saved (AHS) (kWh/a)	Cold		Average		Warm	
	5536		2830		1280	

Accessories

Water heaters

Name	Photo	Description
WKH 160-2		Duct water heaters for round ducts
WKH 160-4	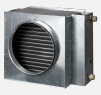	Duct water heaters for round ducts

Fittings

Name	Photo	Description

K 160		Clamp for round flexible ducts