

Iso-Mix 160 T

Mixed-flow inline fans in sound-insulated casings

- Sound-insulated casing
- Impeller type: Mixed-flow
- Casing material: Coated steel
- Installation in any position
- Timer: Turn off timer

	Unit of measurement	Iso-Mix 160 T	
Speed	-	1	2
Phases	-	1	
Maximum supply voltage	V	230	
Minimum supply voltage	V	230	
Power supply frequency	Hz	50/60	
Maximum airflow	m³/h	410	550
Weight	kg	6.1	
Transported air temperature (max)	°C	60	
Ingress protection rating	-	IPX4	
Ingress protection rating of the drive	-	IP44	
Impeller material	-	Plastic	

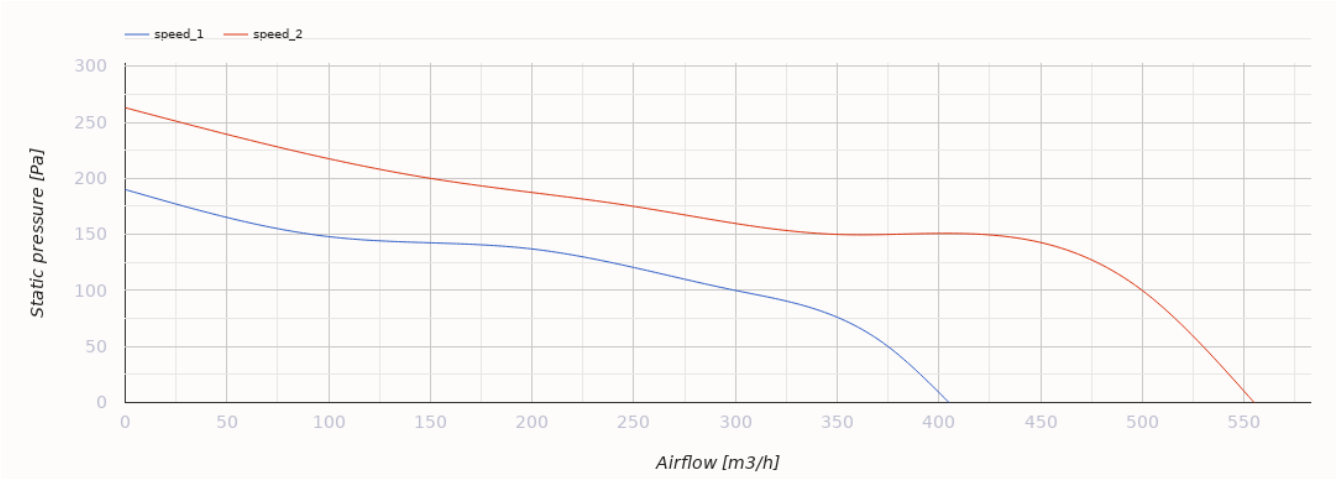

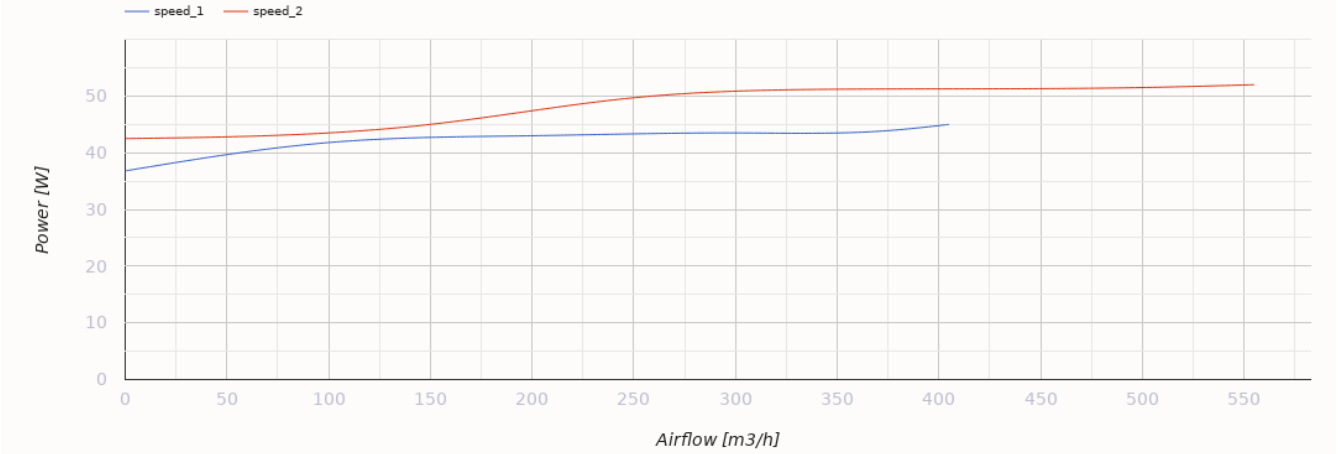

Dimensions

Ø D	H	L	L1	W	W1
157	263	580	44	273	231

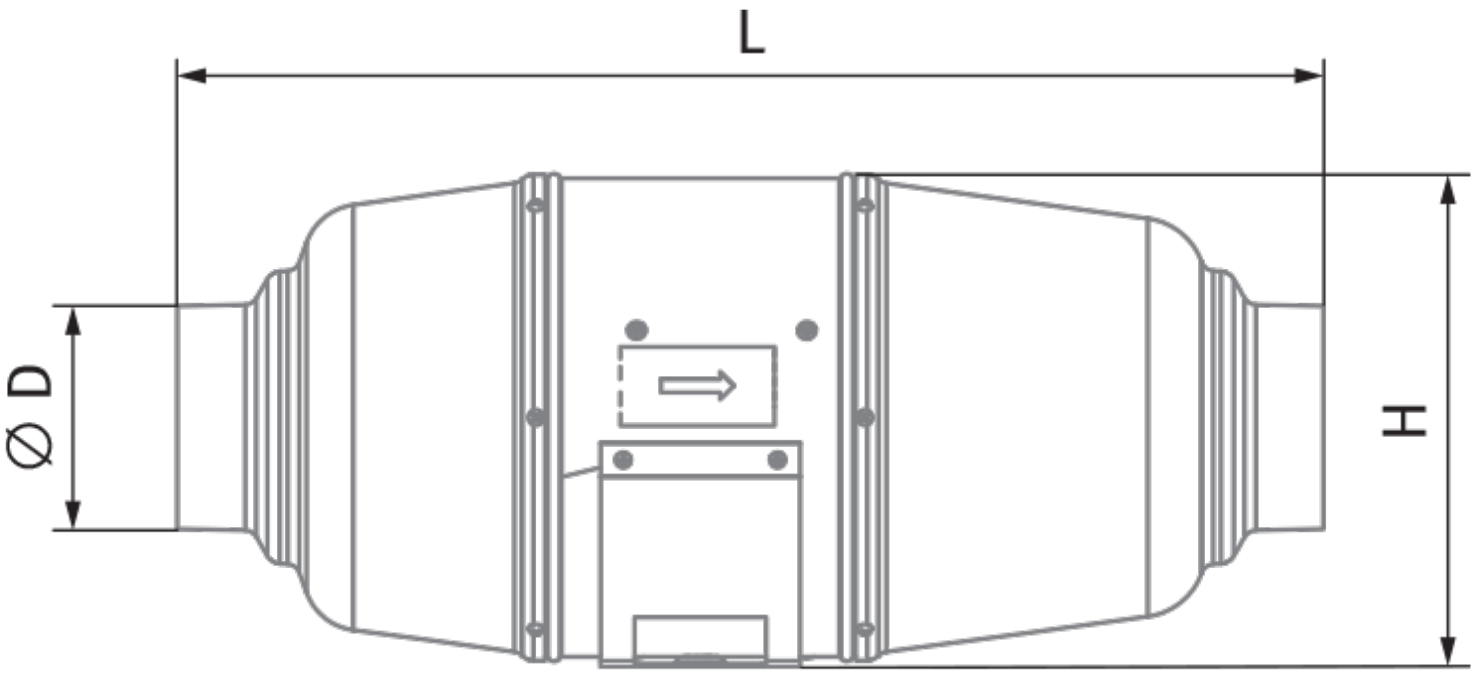
L
⌀ D
H

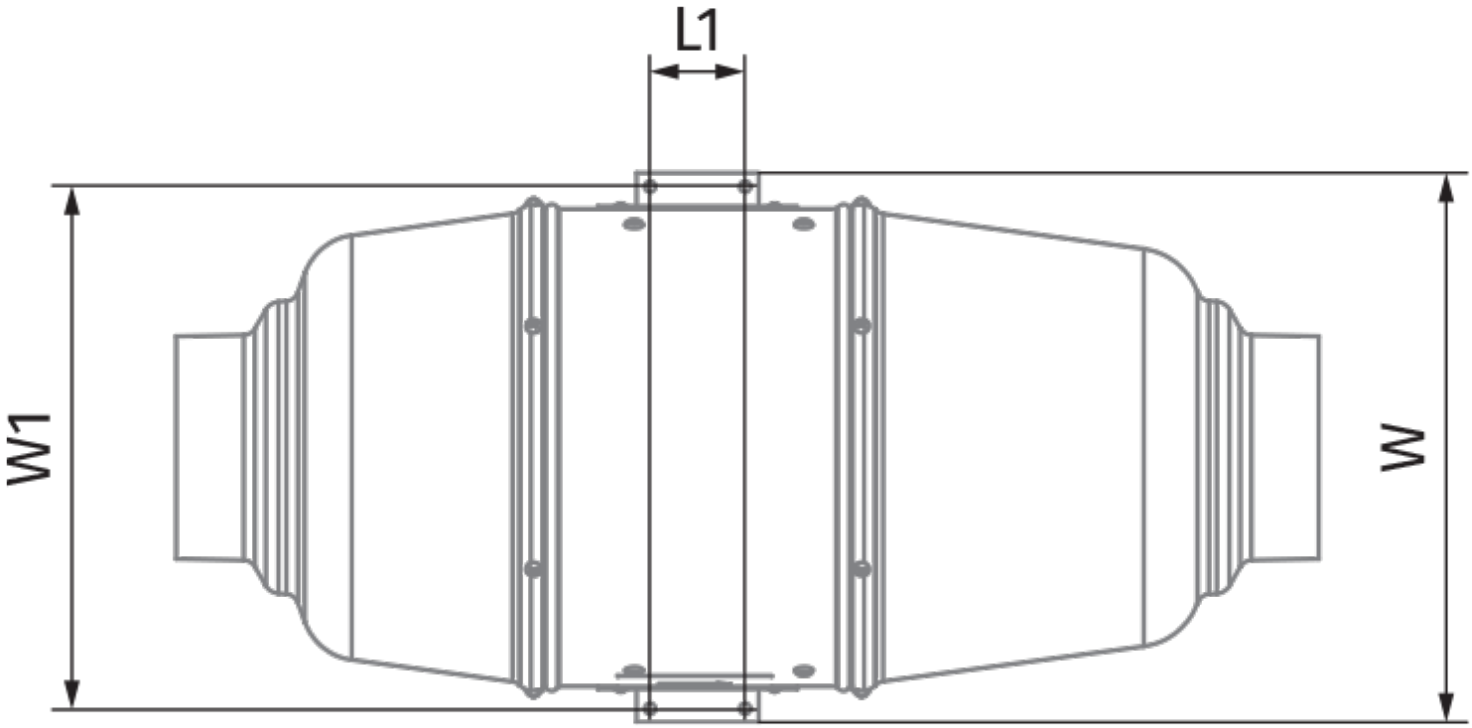
L1
W1
W

Ecodesign

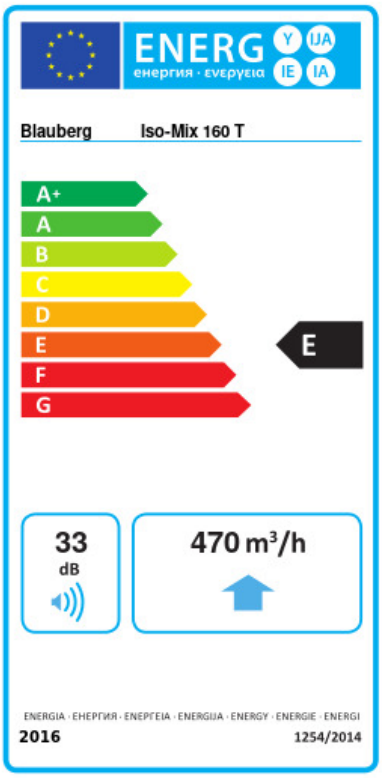

Trademark	Blauberg				
Model	Iso-Mix 160 T				
Specific energy consumption (SEC) (kWh/(m²/a))	Cold		Average		Warm	
	-52.8	A+	-25.7	C	-10.2	E
Type of ventilation unit	Unidirectional				
Type of drive installed	Multi-speed				
Type of heat recovery system	None				
Maximum flow rate (m³/h)	470				
Electric power input (W)	52				
Reference flow rate (m³/s)	0.091				
Reference pressure difference (Pa)	50				
Specific power input (SPI) (W/(m³/h))	0.137				
Control typology	Local demand control				
Maximum external leakage rates (%)	2.7				
Declared typology	RVU UVU				
Sound power level (dB(A))	33				
The annual electricity consumption (AEC) (kWh/a)	Cold	Average	Warm		
	102	102	102		
The annual heating saved (AHS) (kWh/a)	Cold	Average	Warm		
	5536	2830	1280		

Accessories

Water heaters

Name	Photo	Description
WKH 160-2		Duct water heaters for round ducts
WKH 160-4	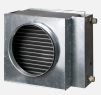	Duct water heaters for round ducts

Fittings

Name	Photo	Description

K 160		Clamp for round flexible ducts