

Iso-Mix 100 W1

Mixed-flow inline fans in sound-insulated casings

- Sound-insulated casing
- Impeller type: Mixed-flow
- Casing material: Coated steel
- Installation in any position
- Cable with mains plug

	Unit of measurement	Iso-Mix 100 W1		
Speed	-	1	2	3
Phases	-	1		
Minimum supply voltage	V	230		
Maximum supply voltage	V	230		
Power supply frequency	Hz	50/60		
Maximum airflow	m³/h	100	140	240
Weight	kg	4.7		
Transported air temperature (max)	°C	60		
Ingress protection rating	-	IPX4		
Ingress protection rating of the drive	-	IP44		
Impeller material	-	Plastic		

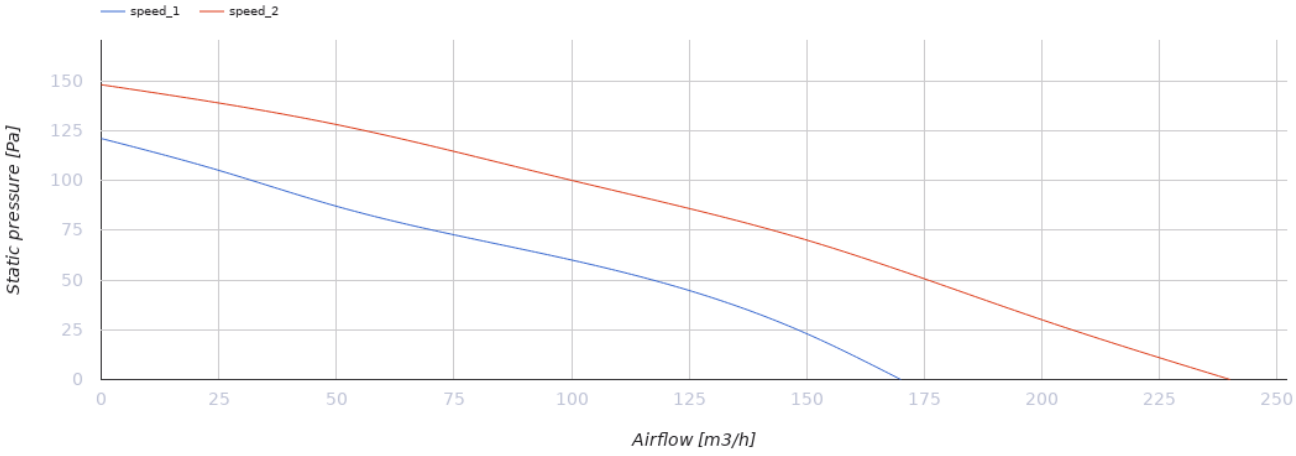

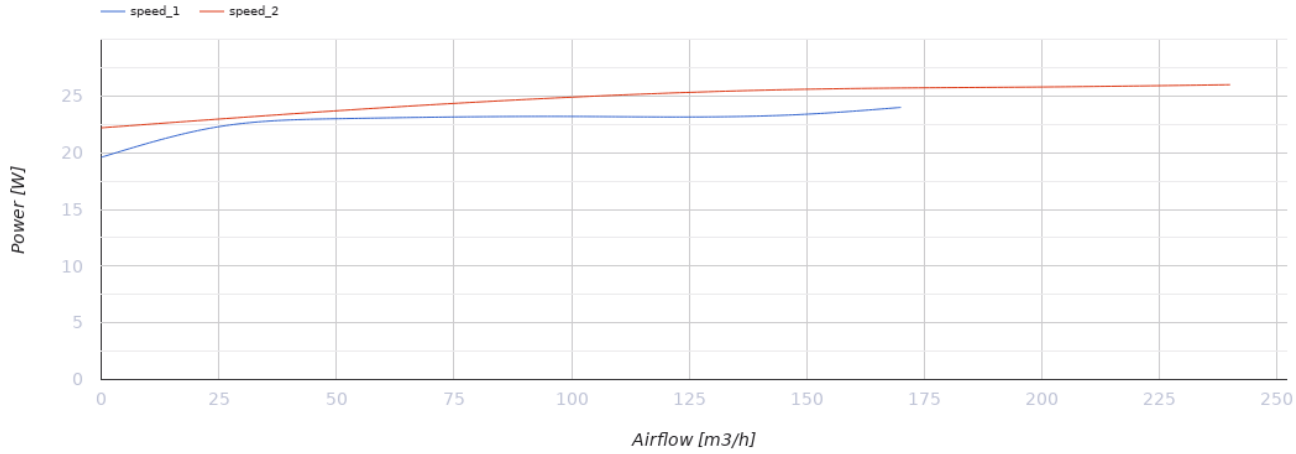

Dimensions

Ø D	H	L	L1	W	W1
98	220	505	42	243	231

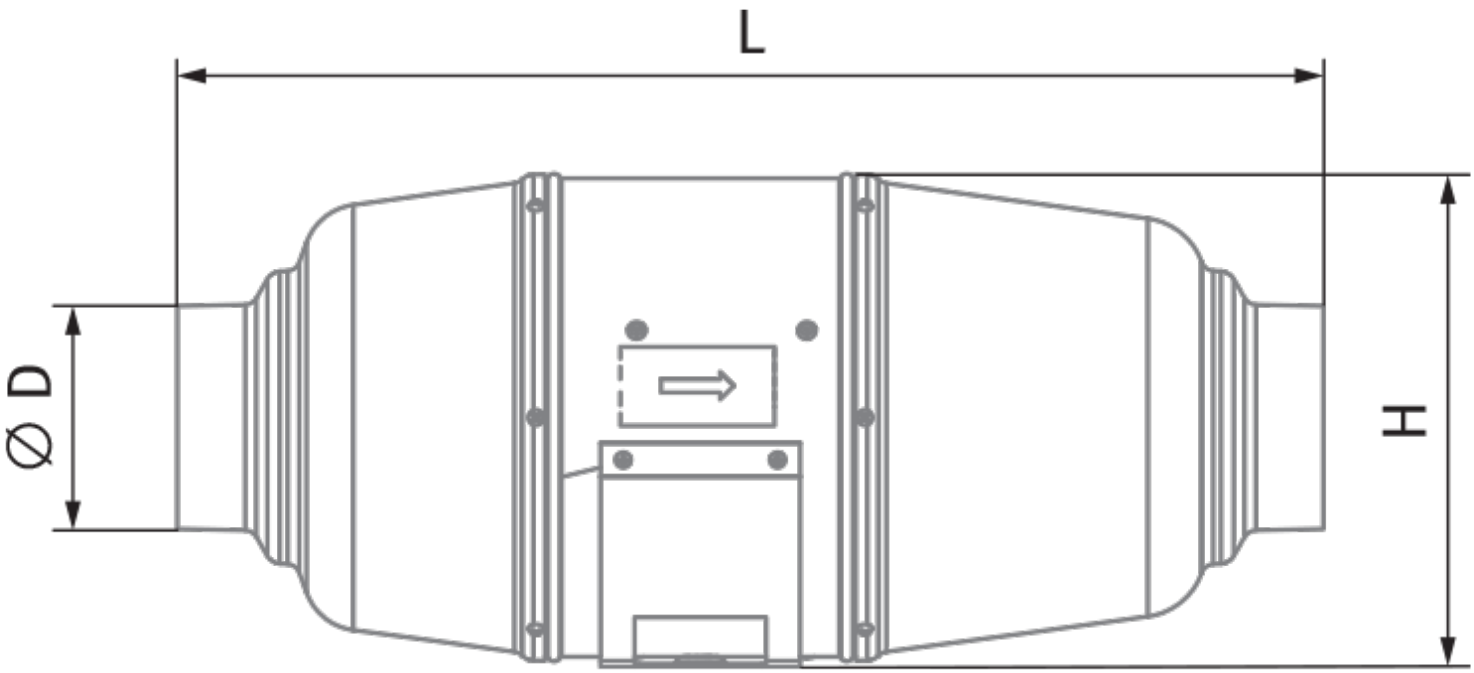
L
⌀ D
H

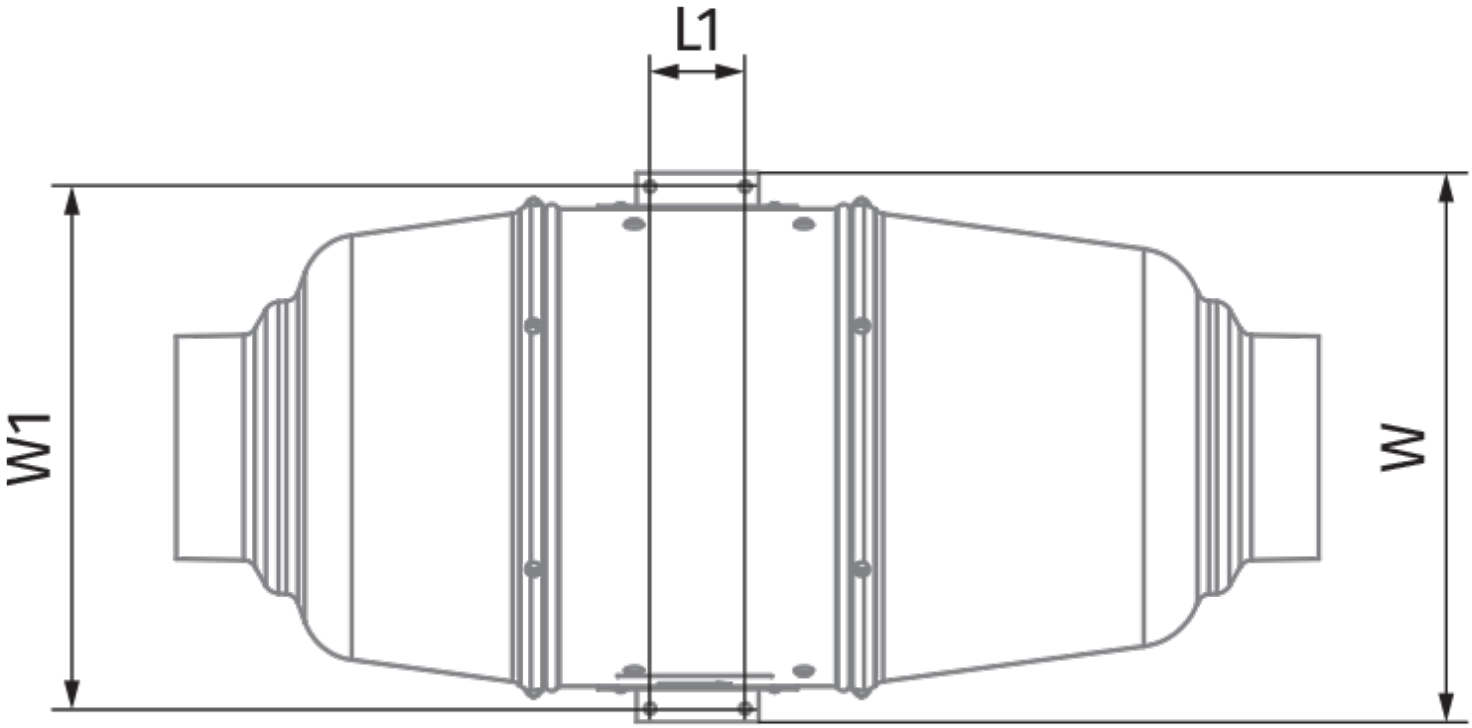
L1
W1
W

Ecodesign

Trademark	Blauberg					
Model	Iso-Mix 100 W1					
Specific energy consumption (SEC) (kWh/(m²/a))	Cold		Average		Warm	
	-53.7	A+	-26.6	B	-11.1	E
Type of ventilation unit	Unidirectional					
Type of drive installed	Multi-speed					
Type of heat recovery system	None					
Maximum flow rate (m³/h)	75					
Electric power input (W)	21					
Reference flow rate (m³/s)	0.027					
Reference pressure difference (Pa)	50					
Specific power input (SPI) (W/(m³/h))	0.125					
Control typology	Local demand control					
Maximum external leakage rates (%)	2.7					
Declared typology	RVU UVU					
Sound power level (dB(A))	47					
The annual electricity consumption (AEC) (kWh/a)	Cold		Average		Warm	
	66		66		66	
The annual heating saved (AHS) (kWh/a)	Cold		Average		Warm	
	5536		2830		1280	

Accessories

Water heaters

Name	Photo	Description
WKH 100-2		Duct water heaters for round ducts
WKH 100-4	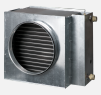	Duct water heaters for round ducts