

# Iso-Mix 100 GI1

Mixed-flow inline fans in sound-insulated casings

- Sound-insulated casing
- Control: Built-in speed controller
- Impeller type: Mixed-flow
- Casing material: Coated steel
- Installation in any position
- Cable with mains plug
- Temperature sensor: Built-in

| | Unit of measurement | Iso-Mix 100 GI1 | | |
|---|---|---|---|---|
| Speed | - | 1 | 2 | 3 |
| Phases | - | 1 | | |
| Minimum supply voltage | V | 230 | | |
| Maximum supply voltage | V | 230 | | |
| Power supply frequency | Hz | 50/60 | | |
| Maximum airflow | m³/h | 100 | 140 | 240 |
| Weight | kg | 4.7 | | |
| Transported air temperature (max) | °C | 60 | | |
| Ingress protection rating | - | IPX4 | | |
| Ingress protection rating of the drive | - | IP44 | | |
| Impeller material | - | Plastic | | |

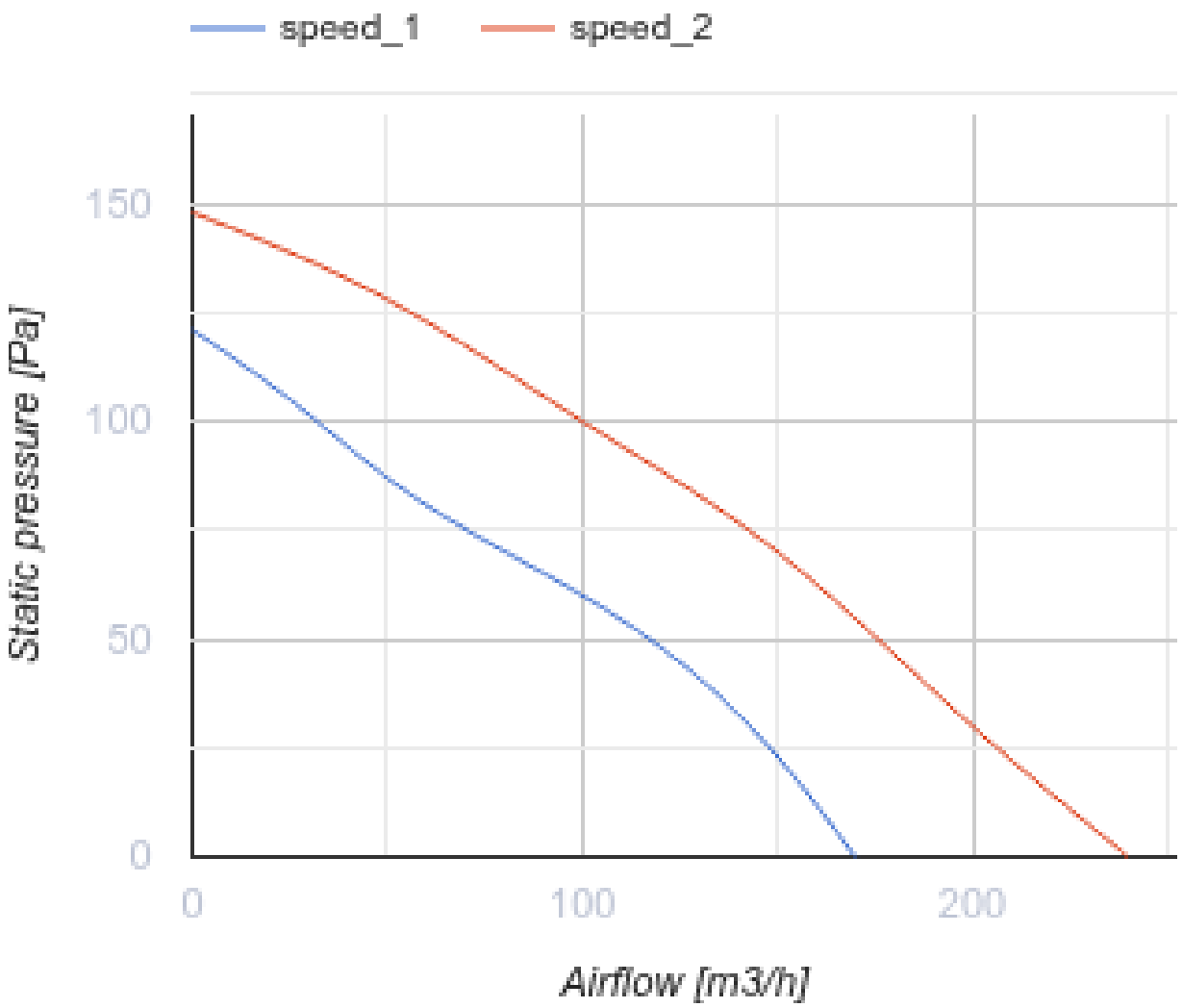
speed_1
speed_2
150
100
50
0
Static pressure [Pa]
0
100
200
Airflow [m3/h]

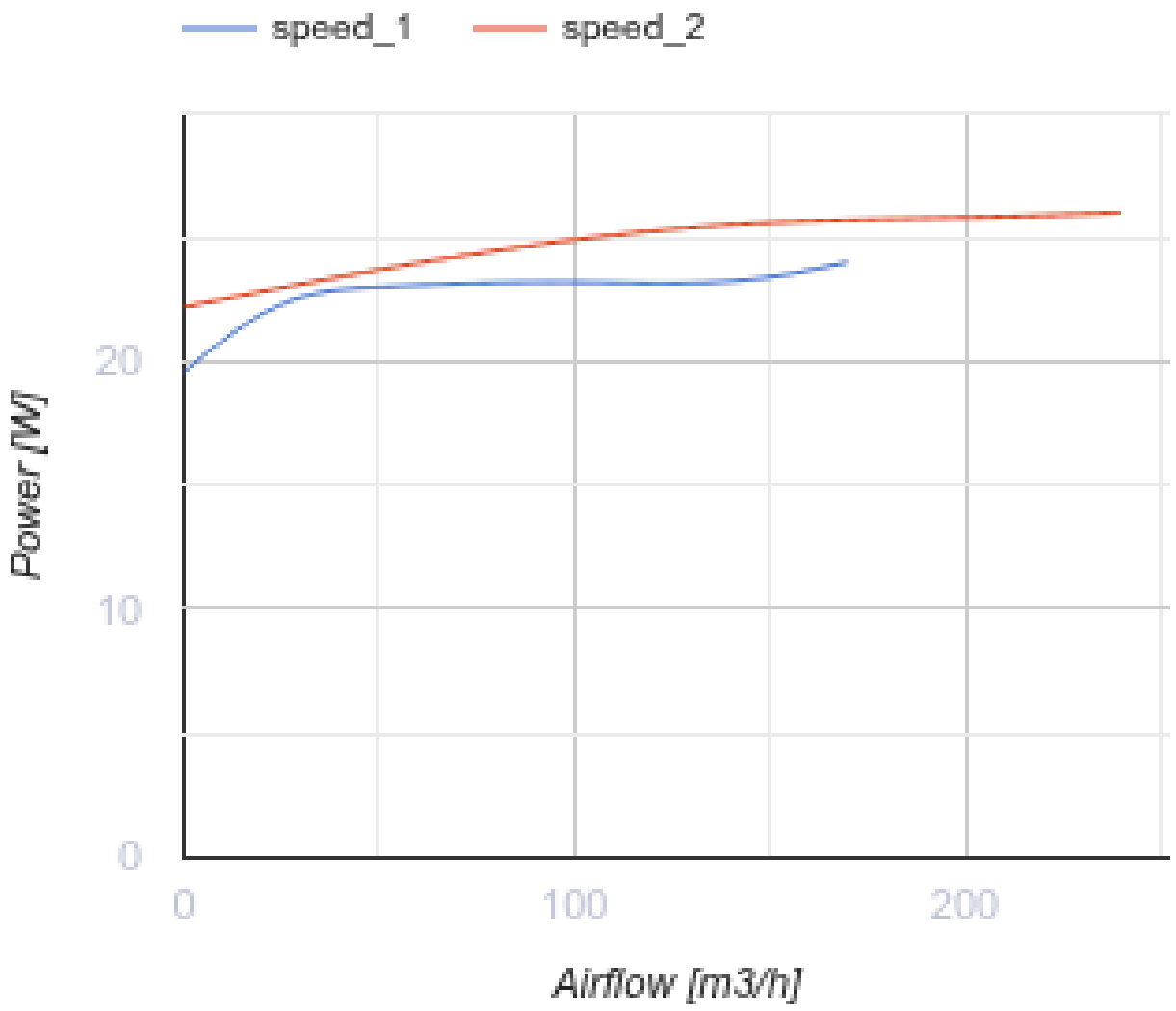


## Dimensions

| Ø D | H | L | L1 | W | W1 |
|---|---|---|---|---|---|
| 98 | 220 | 505 | 42 | 243 | 231 |

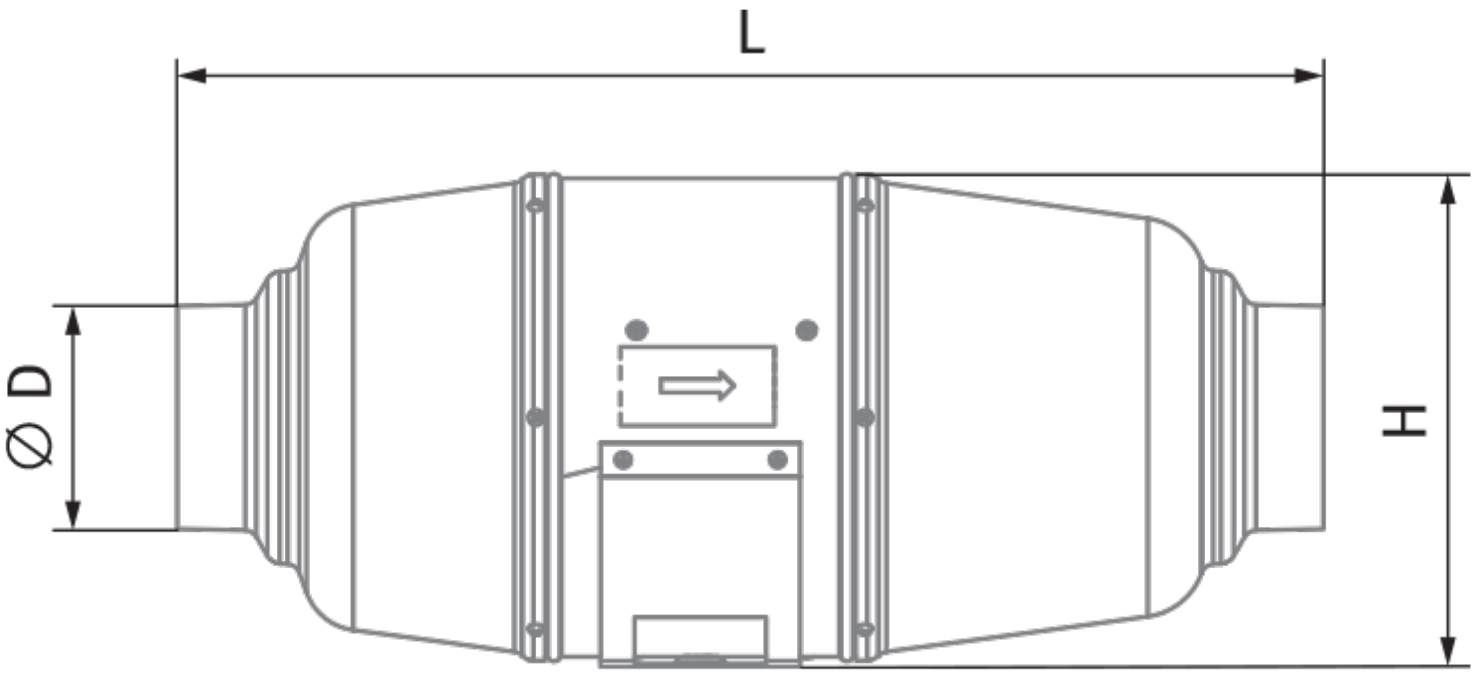
L
⌀ D
H

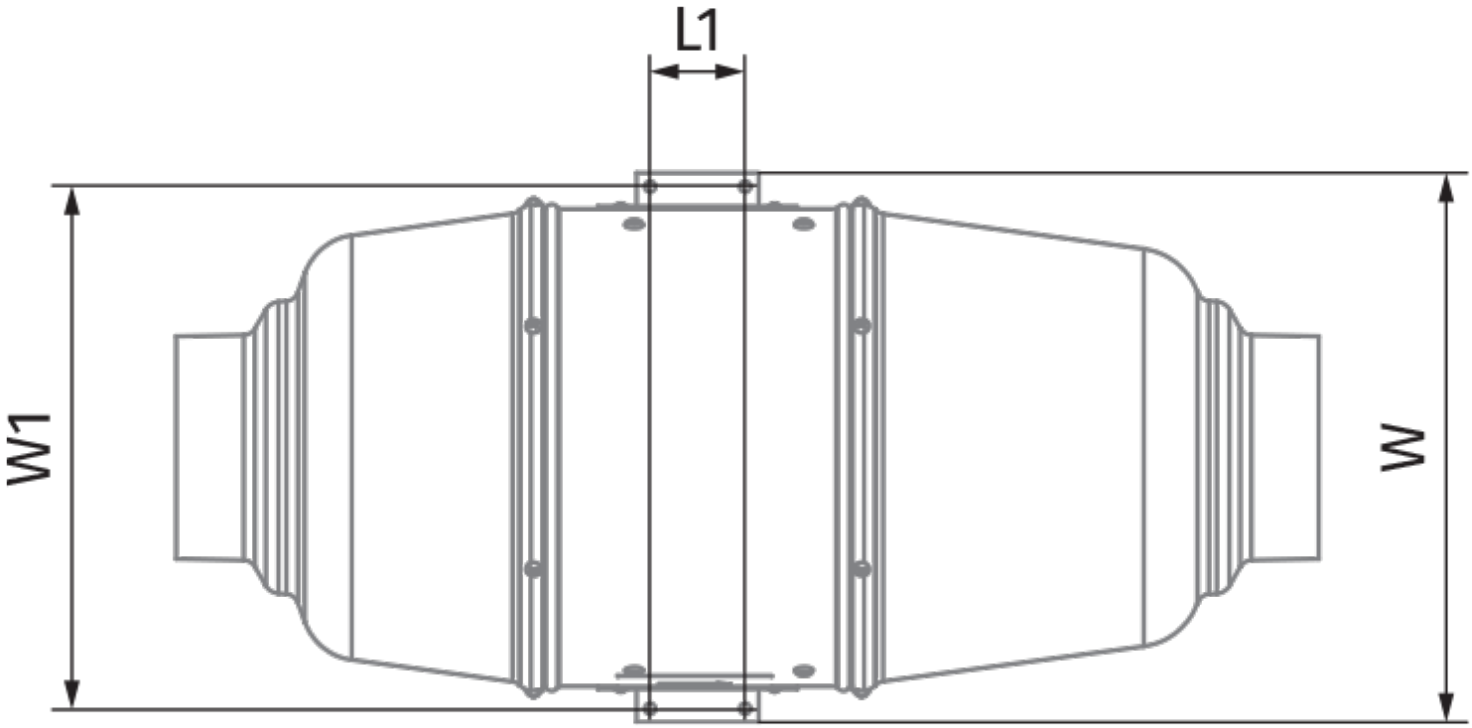
L1
W1
W

## Ecodesign

| Trademark | Blauberg | | | | | |
|---|---|---|---|---|---|---|
| Model | Iso-Mix 100 GI1 | | | | | |
| Specific energy consumption (SEC) (kWh/(m²/a)) | Cold | | Average | | Warm | |
| | -53.7 | A+ | -26.6 | B | -11.1 | E |
| Type of ventilation unit | Unidirectional | | | | | |
| Type of drive installed | Multi-speed | | | | | |
| Type of heat recovery system | None | | | | | |
| Maximum flow rate (m³/h) | 75 | | | | | |
| Electric power input (W) | 21 | | | | | |
| Reference flow rate (m³/s) | 0.027 | | | | | |
| Reference pressure difference (Pa) | 50 | | | | | |
| Specific power input (SPI) (W/(m³/h)) | 0.125 | | | | | |
| Control typology | Local demand control | | | | | |
| Maximum external leakage rates (%) | 2.7 | | | | | |
| Declared typology | RVU UVU | | | | | |
| Sound power level (dB(A)) | 47 | | | | | |
| The annual electricity consumption (AEC) (kWh/a) | Cold | | Average | | Warm | |
| | 66 | | 66 | | 66 | |
| The annual heating saved (AHS) (kWh/a) | Cold | | Average | | Warm | |
| | 5536 | | 2830 | | 1280 | |

## Accessories

### Water heaters

| Name | Photo | Description |
|---|---|---|
| WKH 100-2 |  | Duct water heaters for round ducts |
| WKH 100-4 | 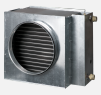 | Duct water heaters for round ducts |