

# AH-10 black 125

Plastic hoods decoration of supply and exhaust vents of public, residential and industrial ventilation systems

• Casing material: PVC

| | Unit of measurement | AH-10 black 125 |
|---|---|---|

## Dimensions

| B | H | L | D |
|---|---|---|---|
| 220 | 230.5 | 54 | 125 |

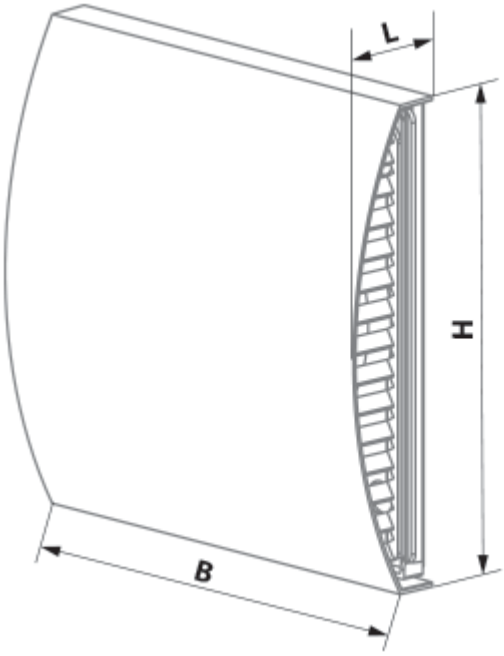
L
H
B

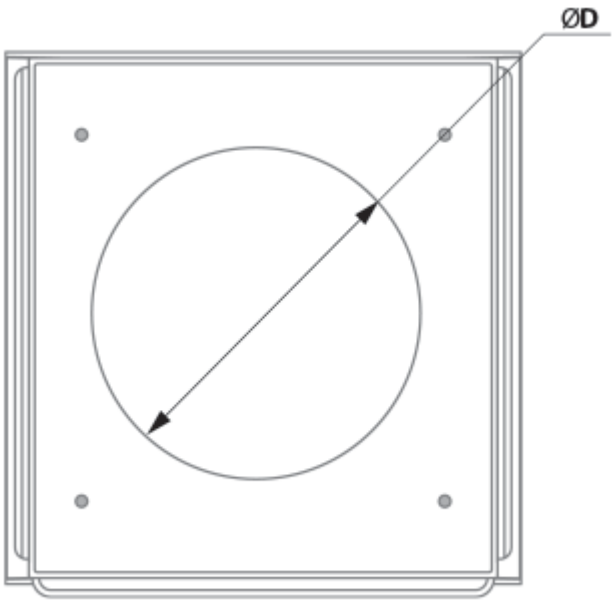
ØD